EDUCATIONAL STUDIES
AND
INVESTIGATIONS

VOLUME I

G. N. KAUL
A. S. GAVADE
V. R. GOKHALE
C. M. THACORE

Under the Patronage of the Maharaja Sayajirao University of Baroda

Edited by
THE INDIAN INSTITUTE OF EDUCATION
BOMBAY

EDUCATIONAL STUDIES AND INVESTIGATIONS

VOLUME I

Includes synopses of the theses of

G. N. KAUL, PH.D.,
A. S. GAVADE, PH.D.,
V R. GOKHALE, M.ED., and
C. M. THACORE, PH.D.

ASIA PUBLISHING HOUSE
BOMBAY — CALCUTTA

First edition 1951

All Rights Reserved

Price : Rs. 15

Printed by V. V Bambardekar at the India Printing Works, 9 Bakehouse Lane, Fort, Bombay, and published by B. A. Olkar for the Asia Publishing House, 17 Gunbow Street, Bombay 1.

FOREWORD

It gives me great pleasure to present this first volume of *Educational Studies and Investigations*—a series which the Indian Institute of Education proposes to publish with the kind collaboration of Asia Publishing House, Bombay.

As the educational public is aware, the Institute edits the *Indian Journal of Educational Research* which is being published by Asia Publishing House. This Journal is trying to publicize the results of educational research carried out in India as well as the educational research done by Indian students in foreign universities. But our experience of the last year or so showed us that it would not be desirable to depend exclusively upon this Journal to publicize *all* the educational research done in India or by Indian students. In the first place, the amount of this research is so large that the Journal can hardly keep pace even with the current work and cannot at all publicize all the work done in the past—especially since 1939—most of which is unpublished so far and a good deal of which is worthy of publication. Moreover, the size of some theses is so big that it is very inconvenient to include them in a Journal. The Institute, therefore, decided to supplement the work of the Journal by publishing this series which will contain the lengthier synopses of research investigations which could not be conveniently accommodated in the Journal.

The present volume includes the synopses of four investigations. The *first* is the thesis of Dr. G. N. Kaul on the *Promotion of Learning in Kashmir during the Hindu Period* (273 B.C. to 1339 A.D.). The history of Kashmir, especially in its educational and cultural aspects, has attracted considerable attention in recent years. Dr. G. M. D. Sufi's *Kashir* deals with the educational and cultural history of Kashmir during the Muslim Period and has recently been published by the Punjab University. No book dealing comprehensively with the earlier and more important Hindu period was available and students of Indian education would, therefore, be greatly obliged to Dr. Kaul for his scholarly work which is now being published. The *second* synopsis is that of a thesis submitted by Dr. A. S. Gavade for the Ph.D. degree of the University of Leeds. Dr. Gavade's findings show how differences in experiential background influence scores of intelligence tests and suggest a technique for the standardisation of tests in a manner that would eliminate such differences. I entirely agree with Prof. G. P. Meredith in his valuation of this work * and do not propose to repeat it here. The *third* synopsis is of the thesis which Shri V. R. Gokhale submitted for the

---

* See p. 67 *Supra.*

M.Ed. degree of the Bombay University. It proves that it is wrong to make *all* students study the same syllabus in Mathematics for the S.S.C. Examination and suggests that students should be grouped in three batches on the basis of their I.Qs and that three different curricula should be used for them. These significant results deserve a close scrutiny at the hands of our Secondary School-Leaving Examination Boards which have not yet made Elementary Mathematics alone compulsory. The *fourth* synopsis is that of the thesis submitted by Dr. C. M. Thacore for the Ph.D. degree of the Lucknow University. It deals with some aspects of the educational thought of India and studies four Indian educational experiments, viz. Gurukula, Visva-Bharati, Jamia Millia, and the Wardha Scheme, from the points of view of Idealism, Naturalism, Humanism and Supernaturalism. It is a pioneer, learned, and delightful work which is highly welcome at this time and which, in my opinion, is a unique contribution of a high order to our educational literature.

Before I close, I would like to perform the pleasant duty of offering the sincere thanks of the Indian Institute of Education and Asia Publishing House to all those institutions and persons who have helped us in publishing this volume. First and foremost we are grateful to the Maharaja Sayajirao University of Baroda for kindly sanctioning a substantial publication grant for this volume. We are also grateful to Dr. G. N. Kaul, Dr. A. S. Gavade, Shri V R. Gokhale, and Dr. C. M. Thacore who kindly permitted us to publish these synopses without expecting any monetary return. Last, but not the least, we are also very grateful to the authorities of the University of Bombay and Lucknow for kindly permitting us to publish the synopses.

We are also very grateful to Shrimati Madhuri R. Shah for editing the theses and to Dr. Chitra Naik for correcting the proofs.

I trust that this venture of ours will meet with the approval and generous support of our educationists so that we may be able to follow it up with other volumes which are so greatly needed.

R. V. PARULEKAR
Director
Indian Institute of Education
Bombay

11 Horniman Circle,
Fort, Bombay.
15th June 1951.

CONTENTS

PAGES

FOREWORD

By Shri R. V Parulekar, Director, Indian Institute of Education, Bombay v–vi

1. PROMOTION OF LEARNING IN KASHMIR DURING THE HINDU PERIOD (273 B.C. to 1339 A.D.)

   By Dr. G. N. Kaul, Ph.D. 1–66

2. AN ANALYTICAL AND EXPERIMENTAL INVESTIGATION INTO THE NATURE AND EFFECTS OF ITEM CONTENTS OF INTELLIGENCE TESTS

   By Dr. A. S. Gavade, Ph.D. 67–122

3. DIFFERENTIATED CURRICULA IN SECONDARY SCHOOL MATHEMATICS ON THE BASIS OF INTELLIGENCE LEVEL

   By Shri V R. Gokhale, M.Ed. 123–152

4. SOME ASPECTS OF THE EDUCATIONAL THOUGHT OF INDIA

   By Dr. C. M. Thacore, Ph.D. 153–262

PROMOTION OF LEARNING IN KASHMIR DURING THE HINDU PERIOD

(273 B.C. TO 1339 A.D.)

By

Dr. G. N. KAUL, PH.D.,

Lecturer, S.T. College, Baroda.

1. *Introduction* : What we call Kashmir today comprises of four important provinces, viz. Jammu, Kashmir, Little Tibet, and Gilgit. This territory lies between 32° — 17′ to 36° — 58′ North latitude and 173° — 26′ to 180° — 30′ East longitude. It is surrounded by the Chinese Tibet on the East, Yarkand and Pamir on the North, Yagistan on the West and the Punjab on the South. The size of the country is 400 miles long and 300 miles broad. The total area is 84,432 sq. miles with a population of nearly 40 lakhs. This large and heterogenous unit is not the one that is discussed in this thesis. By Kashmir we mean the limited valley that is about 84 miles long and 20 to 25 miles broad. It looks like an irregular oval. This part covers an area of 1,800 to 1,900 sq. miles and its height above sea-level is nowhere less than 5,000 feet. It is surrounded by an almost unbroken chain of mountain ranges which rise between 10,000 to 18,000 feet high. The only gap in this is the gorge at Varamula, the modern Baramula—the ancient as well as the modern royal gate to the happy valley.[1]

In spite, however, of these mountain ramparts, Kashmir was known to the outside world from very early times and under the same name. Ptolemy knew it as Kaspeiria, Dionysios knew the Kaspeiroi as a tribe famous among all Indians for their fast feet. This description of the Kashmiri closely agrees with Alberuni's description of the Kashmiri pedestrians.[2] Herodotus, the Father of History, knew it as Kaspatyros.[3] The Chinese knew it under the name of Kia-Shi-mi-lo and Ki-Pin. The geographical position of the term Ki-Pin, however, could not be defined by scholars for a long time. The dearth of informative material on the point drove scholars to content themselves with interpreting the term to mean " a variety of territories on the northern confines of India among them also Kashmir ".[4] But now Ki-Pin is more and more understood to represent Kashmir alone.[5] These foreign notices, though very scanty,

1. Stein : *Memoirs on the Ancient Geography of Kashmir*, Vol. II, p. 352.
2. Alberuni : *India*, Vol. I, p. 206.
3. Stein : *Ancient Geography of Kashmir*, pp. 9, 10, 11.
4. Stein : *op. cit.*, p. 354.
5. (a) Bose : *Indian Teachers in China.*
   (b) Watters : *On Yuan Chwang*, I, 259.

are yet significant. They reveal the antiquity of the land and the attractive character of the people. They also reveal that a regular intercourse existed between Kashmir and the countries around it. These scanty and vague references, it must be stated, are not the only references to prove the existence of this intercourse. Ample numismatic, architectural, sculptural and literary materials have also been discovered to establish this fact. The materials go to show that Gandhara, Central Asia, China, and the mainland of India have exerted much influence upon the development of the art and literature of Kashmirians.

The high mountain passes, though they render easy intercourse difficult, have their own advantages. Any new event or movement that now and then convulsed and shook the easily approachable plains of India reached Kashmir rather late, with its fury spent, and then it found enough security to take firm root and develop to its full stature. All the minor and major events in the history of Kashmir, the long periods for which some of the dynasties are said to have ruled, the crushing poverty of the country and its direct bearing on the character of the people and on their arts and crafts, the feuds of princes over petty political and economic gains, the court intrigues of kings' councillors, the ever-ready revolting behaviour of governors, as well as the unhindered cultivation of letters and deep scholarship, the evolution of religious philosophies, the undeniably artistic temperament of the people, who produced wonderful masterpieces of art, architecture, sculpture, painting, wood carving and fabrics, etc.—all these are direct products of the geographical position of the country. Commenting on the influence of the geographical position of the country on her people Stein says, "The great geographical barriers which separate Kashmir from the rest of India, coupled with the marked differences of climatic conditions, have from early times assured to the Alpine land a distinct character of its own which manifests itself strongly in all matters of culture, custom, and social organisation."[6]

2. *Religious History of Kashmir in the Ancient Period*: *Buddhism*: With this geographical background in view, we shall now turn to a broad survey of the religious history of Kashmir in the ancient period. In these bygone times, education and religion were so intimately connected that it is not possible to understand the one without studying the other. The three next sections would, therefore, be devoted to a bird's-eye-view of (*a*) Buddhism, (*b*) Saivism, and (*c*) Tantric literature in ancient Kashmir and to explaining the influence which they exerted over education and life of the people.

Our oldest available record goes back to 273 B.C. when Asoka is believed to have introduced Buddhism in Kashmir. Kalhana mentions an Asoka, a ruler of Kashmir, but it is a doubtful issue whether the Kashmirian Asoka was the same as the great Asoka of India.[7] But we

---

6. Stein: *Rajatarangini*: Preface, p. xvi.
7. *Vide* Stein: *Rajatarangini*: Introduction, p. 75, and Smith: *Early History of India*, p. 170 and *Cambridge History of India*, Vol. I, pp. 499-501.

are not here very much concerned to know who introduced Buddhism or when it was introduced. But we are concerned more with knowing the spirit in which and the circumstances under which it was introduced, for that alone would help us to understand how Buddhism influenced the people to take greater interest in the promotion of learning.

By the time Buddhism reached Kashmir it had undergone some changes. One of its distinguishing features was the spirit of revolt against authority. A legend tells of the flight into Kashmir of 500 Arhat dissentients from the Buddhist Council of Asoka and indeed this indicates a revolt against the authoritativeness of the other school, and an attempt to seek a safe asylum where they could have their own way and evolve their own doctrine without any interference from their opponents with whom they could not settle their differences amicably. Moreover, Buddhism had progressed much when it entered Kashmir. Firstly, it had introduced a systematised education not only for the monks, but also for the laity ; secondly, it had allowed women a status of equality, allowing them to enter the order, become nuns and get educated ; thirdly, it had developed a technique in imparting education to monks and teachers and had succeeded in infusing in them a spirit of adventure and love for the cause of diffusing the Dhamma of the Lord among unknown peoples living in far-off lands ; and lastly, it had succeeded in opening out the water-tight compartments that had disfigured the Indian society. It had brought them under one fold thus rendering the education of the majority possible. Above all, we know the sect that entered Kashmir was the one which had revolted against the authoritativeness of others.

The Buddhism that entered Kashmir, therefore, was a virile religion throbbing with new life ; and in Kashmir the monks had not to deal with innumerable and, therefore, unmanageable people. The valley, one has to remember, is small and its inhabitants limited in number. The task of the monks, therefore, was not at all difficult. They started their beneficent work. They opened Viharas to impart education. They invited all—and indeed all flocked to them. Their age-long experience, and the receptivity of the Kashmirians soon bore fruit. Education was broadcast and before long, became almost universal.

The size, climate, fertility and security of the country proved very favourable for the growth of Buddhism. More and more Buddhist scholars thus increased. More scholars meant, for Kashmirians, more scholarly guidance and better scholastic tradition and atmosphere. Thus, away from the noise and bustle of the plains and secure behind the mountain ramparts, surging with a spirit of enquiry and revolt, Buddhism in Kashmir was destined to make a mark.

What the faith of pre-Buddhist Kashmirians was is not known accurately. From legends, myths and other sources, it is gathered that Naga-worship liberalized by a touch of Brahminism formed the religion of the masses. Originally an insular people the introduction of Buddhism picked them out of their isolation and brought them into contact with the Buddhist world—and the Buddhist world, by now, was a wide world. This meant an intimate intercourse between Kashmir on the

one hand and the Buddhist world on the other. Diverse influences began to pour in from different quarters and the plastic mind of the Kashmirians began to grow rich. For one thing it removed their narrowness of vision and placed before them new ideals and standards to cultivate and strive for.

Asoka, as stated above, introduced Buddhism in Kashmir in 273-32 B.C. He patronized it well and people began to study it. This period beginning with Asoka to the coming of the Kushan dynasty to power (273-32 B.C. to 128 A.D.) was essentially a period of studentship and preparation for the Kashmirians. No great scholar appears to have flourished during this period.

The period beginning with Kanishka to the coming of the Karkota dynasty (128 A.D. to 896 A.D.) is the most original period so far as promotion of learning is concerned. During this period education became more or less universal, and the result was that Kashmir produced some of her greatest scholars and contributed to the Buddhist stock of learning immensely. It was again during this period that Kashmir sent forth some of her greatest travellers and teachers, preachers and scholars. The fame of the Kashmirian learning and that of its scholars travelled to distant countries and elicited the respect and obeisance of the greatest scholars of the time. We have it on the authority of Hiuen Tsiang that when Kanishka had to hold the Buddhist Synod, and when a discussion was held to choose the best place for the purpose, the noted teachers voted for Kashmir, "The mind of the assembly," they said, "is well affected towards the country, the land is guarded by the mountains on every side, Yakshas defend its frontiers, the soil is rich and productive and it is well provided with food. Here both saints and sages assemble and abide, here the spiritual Rishis wander and rest." [8]

The purpose of holding the Synod, as recorded by the Buddhist historian Taranatha of Tibet and Parmartha the biographer of Vasubandhu, was to settle the confusion that had arisen between the different schools of Buddhism. Kashmir had so well established its reputation as an authoritative seat of learning that it was unanimously declared to be the best place for holding such an important synod. The council met under the presidentship of Parsava. The differences were discussed and several commentaries drawn up. These were known as *Upadesa-Sastra* and *Vibhasa-Sastra*. Hiuen Tsiang records that Kanishka had these treatises written on copper plates and boxed in stone boxes and stored up in a stupa built for the purpose.[9] Parmartha who gives a

---

8. Beal: *Si-Yu-Ki*, p. 153.
9. (*a*) "It is possible that these records may still exist burried under some mound near Srinagar, and that a lucky chance may reveal them." (Smith: *Early History of India*, p. 284.)
   (*b*) "What a wonderful find it would be, if excavators and explorers, in their endeavour to search for the bones of Gautama Buddha, should in the years to come, light upon the stone boxes which contain the copper plates deposited by Kanishka, when excavations will bring to light a priceless treasure of this description, India will be able to explain to herself, without seeking the help of foreign scholarship, the complicated philosophy of Buddhism." (Yamakami, S.: *Systems of Buddhist Thought*, p. 108.)

slightly different account of this council says that when the commentary was completed it was ordained by a stone inscription that no portion of the *Abhidharma* text and its *Vibhasa* should go out of the country. The text of the inscription runs thus : " Those who hereafter learn this law must not go out of Kashmir. No sentence of the eight books or of the *Vibhasa* must pass out of the land, lest other schools, or the *Mahayana* should corrupt the true law." [10] If Parmartha is to be relied upon, Kashmir appears to have been recognised as the only place where the true law could flourish. The *Vibhasa-sastra* is so closely associated with Kashmir that it is called Kashmirshi in Chinese.

Buddhism has broadly been classified into two great schools, viz. the Lesser Vehicle or Hinayana, and the Greater Vehicle or Mahayana. Each of these schools developed, in due course, many systems, Hinayana alone counting as many as twenty. These various systems, however, have been classified under seven main systems. These are (*a*) the Sarvastitvavadin, (*b*) the Satyasiddhi, (*c*) the Madhyamika, (*d*) the Alaya Phenomenology, (*e*) the Bhutatahata Phenomenology, (*f*) the Tien Tai, and (*g*) the Avatamsaka. Of these seven, the first *five* originated and developed in India and the last *two* in China and Japan. A comprehensive study of these systems being beyond the scope of the present thesis, their discussions will be limited to indicating the Kashmirian contributions to each of the schools that developed in India.

(a) *Sarvastitvavadin* : This is the most important of all the Buddhist systems of thought. The adherents of this school assert that they represent the original teachings of Buddha. From a historical point of view also it has to be admitted that most of the other systems have drawn their inspiration from this school.

Some of the greatest writers of this school were Katyayaniputra, Parsva and Vasubandhu. Katyayaniputra is the author of the *Abhidharmajnana—Prasthana-sastra.* The work enjoys the reputation of being known as " the first authoritative work of Sarvastitvavadin." [11] Parsva had the rare privilege of presiding over the Buddhist synod held during the reign of Kanishka. It was under his guidance that the *Abhidharmavibhashasastya* was compiled. Vasubandhu is the celebrated author of the *Abhidharmakosa.* This work is regarded as " the most systematic exposition of the philosophy of the Hinayana ".[12] These and many other authorities of the Little Vehicle flourished in Kashmir. So much was their influence and contribution that the country was considered to be " the chief centre of the Sarvastitvavadins ".[13]

(b) *The Satyasiddhi School or the Theory of the Sarva-sunyatavada* : This school is considered to be of a higher and deeper character than that of the Sarvastitvavadins. It is as unfortunate as it is humiliating to state that not only the author and his work but " the very name of

10. Elliot: *Hinduism and Buddhism,* Vol. II, p. 79.
11. Yamakami: *Systems of Buddhist Thought,* p. 105.
12. *Ibid.,* p. 109.
13. *Ibid.,* p. 100.

this school has been forgotten in India ".[14] Fortunately, however, the name of the author, and a translation of his work into Chinese by Kumarajiva, one of the greatest sons of the soil, has been preserved in China and it was left to the Chinese scholars to reintroduce the study of this forgotten school in the land of its birth.

The founder of this school was Harivarman. Born somewhere in Central India, he travelled over to Kashmir to study Buddhism, and there had the privilege of learning it at the feet of the famous Kashmirian teacher Kumarlabdha.[15] Harivarman was a man of extraordinary courage and independence of thought. He strongly criticized the views not only of Mahayanists, but also those of Hinayanists upon whose tenets he built his own thesis. Commenting on his work Yamakami says, " His doctrine is to be regarded as the highest point of philosophical perfection attained by Hinayanism, and, in a sense it constitutes the stage of transition between Hinayanism and Mahayanism. In his treatise the *Satyasiddhi Sastra,* the author takes up a negative standpoint with regard to everything, strenuously denying the absolute existence of anything in the transcendental sense, ascribing to it a provisional existence in the conventional sense ".[16]

The system originated and developed in Kashmir under the guidance of Kashmirian teachers, and it was here again that its tenets were learnt by Kumarajiva who later translated the work into Chinese.

(c) *The Madhyamika School or The Theory of Middle Course*

" It is well known that the founder of the Madhyamika school is the great Nagarjuna, the most brilliant philosopher of India."[17] He was a native of Berar in Central India, and flourished in the first century A.D. So many contradictory stories have been written about him that some scholars have come to suspect his individuality. Kashmirians also have their own story about him. They believe that he lived in Kashmir for some time and Kalhana even tells the name of the place he resided in. The place is known as Sadarhadvana, modern Harvan. Kalhana pays due tribute to the influence and wisdom of the scholar. He says, " And a Bodhisattava was in this country the sole supreme ruler of the land ; he was the illustrous Nagarjuna who dwelt in Sadarhadvana ". [18]

The introduction of the Mahayana school in Kashmir by Nagarjuna himself meant a better start and very soon the Kashmirians were not only attracted to it, but produced great scholars and teachers. By the time Hiuen Tsiang came to Kashmir, Mahayana Buddhism was well established. His biographer says that the pilgrim found in Kashmir a master aged seventy after his own heart, a learned Mahayanist doctor with whom he studied the works of Nagarjuna. He was gifted with a profound intellect and his vast learning embraced every branch of knowledge.

---

14. *Ibid.*, p. 172
15. *Ibid.*, p. 175.
16. *Ibid.*, p. 172.
17. *Ibid.*, p. 186.
18. Pandit: *Rajatarangini,* Vol. I, p. 173.

(d) *The Alaya Phenomenology or The Theory of Vijnanavadins* : The theory of Vijnanavadins was developed and completed by Asanga and Vasubhandhu. We know the latter was one of the greatest authorities of the Sarvastitvavadin school. This versatile writer was a scholar of dynamic views. Like his philosophy of Alaya or the ever-changing and running stream of consciousness his conception of the Buddhist tenets underwent a continuous change. In his earlier days he contributed to the philosophy of the Hinayana school and in the later to that of their antagonists, the Mahayanists. That keen Chinese observer, Hiuen Tsiang, has not failed to record this change in the views of this scholar. He says that having composed his *Abhidharmakosa,* Vasubhandhu sent it over to Kashmir Vaibhashikas who were greatly pleased with it, but returned it to him for further elaboration. And, records the traveller, it was during this short interval that the scholar changed his views and " when he expanded his aphorisms into a prose treatise he criticised some of the doctrines of the Kashmir Vaibhashikas ". [19]

(e) *The Bhutatahata Phenomenology* : The Mahayanist philosophy as evolved by the Madhymikas and Vijnanvadins was further developed by the Bhutatahata philosophers. This school was established by the great poet-philosopher Asvaghosha. He holds a position of authority in the history of Mahayana Buddhism. His work " Awakening of Faith " inspired many scholars and in due course gave rise to a number of schools, the most important of which are the Tien-Tai, Avatmsaka, Dhyana and Sukhavativyuha.

Asvagosha flourished at the court of King Kanishka. According to one account Kanishka acquired Asvaghosa as a part of war indemnity and loaded him with honours and provided him with a residence in Kashmir to carry on his literary work." [20]

This brief account of the different systems of Buddhistic thought in India, their origin, birthplace and authors indicates that Kashmir was very closely associated with all the important schools that arose in India.

The heights of authoritative scholarship, that the Kashmirians attained during the few centuries since the introduction of Buddhism has been well epitomised by the learned editors of Gilgit manuscripts, Dr. N. Dutt of the Calcutta University and Dr. Shiv Nath Sharma of the Kashmir Research Department. They say,

" The composition of the *Vibhasa-Sastra* in Kashmir indicates that Kashmir grew up to be an academic centre attracting distinguished acaryas from other places. The accounts of the Chinese travellers and Parmartha show that Katyayaniputra, Asvaghosa, Vasubandhu, Vasumitra, Dharmatrata, Sanghabhadra, Vasuddhasimha, Jinabandhu, Sugatamitra, Suryadeva, Jintrata, Kanakavatsa and many other distinguished teachers and writers, lived in Kashmir, from the time of Kanishka. Taranatha tells us that during the reign of Kanishka one wealthy Brahmin called Sutra maintained the Vaibhasika teacher Dharmatrata and the earliest Sautrantika teacher Mahabhadanta Sthavira along with other disciples. Dharmatrata is well

---

19. Watters : *On Yuen Chwang,* pp. 210, 211.
20. Pandit : *Rajatarangini,* I, 107 ff.

known as one of the four renowned acaryas of the Vaibhasika school, the other three being Ghosaka of Tukhara, Vasumitra of Maru and Buddhadeva of Varanasi.

Vasumitra is another famous figure of Kashmir, but there are five others bearing the same name. The Sautrantika teacher Srilabha was an inhabitant of Kashmir. He was a disciple of Kunala. Samghabhadra was another Kashmirian Acarya who was a profound scholar of Vibhasa Sastra of Sarvastivada school. He wrote a commentary on Vasumitra's *Prakarnapada* and was the author of the *Abhidharmavatara-Sastra.* One of his distinguished students is Vasubandhu who studied with him the Vibhasa, the Sastra of the eighteen schools, the Sutras and the Vinayas, the six systems of philosophy and the art of dialectics. He compressed the Abhidharma texts and other Vibhasas in his *Abhidharmakosa* and *Bhasya* and sent them to Kashmir Vaibhasikas who were greatly pleased with them. Gunaprabha and Vimalamitra are the two other teachers whose names occur in the Records of Yuan Chwang. Gunaprabha is mentioned by Taranatha and Bu-ston as a great authority on the Vinaya of the Mulasarvastivadins and as the author of several works. Yuan Chwang refers to the monastery of Matipur where he composed his treatises. As regards Vimalamitra, Yuan Chwang writes that he was a native of Kashmir and an adherent of the Sarvata (i.e. Sarvastivada) school having made a profound study of the canonical and heterodox scriptures and had travelled in India to learn the mysteries of the Tripitaka." [21]

After Kanishka, Buddhism had to meet with reverses again. The kings who followed were not enthusiastic about it. Some showed real antipathy. They persecuted Buddhist monks and destroyed their institutions.[22] This meant a natural set-back for Buddhist learning. Under Meghavahana, however, Buddhism received lavish patronage once again. Meghavahana cherished Asoka's dreams. He wanted to spread Buddhism further in the land, and to accomplish this he stopped at nothing, he would even wage war. For this purpose he is said to have performed a 'digvijaya' as far as Ceylon. His wife was equally interested in this religion. She had a Guru of her own who hailed from the far-of town of 'Loh', i.e. modern Leh. The couple founded many Viharas for the dissemination of Buddhist learning.

The real decay of Buddhism began with the coming of Karkota dynasty to power in 596 A.D. This dynasty is one of the greatest that ever ruled Kashmir. It was a period when new ideals and standards were taking birth and the Kashmirian thought was taking a new shape and form. Buddhism was slowly losing ground in the face of these new ideals. It was, as it were, growing old and was no longer able to keep pace with the developing outlook of the people. Hiuen Tsiang who visited the country in the early days of this dynasty in 631 A.D. was not satisfied with the state of Buddhism in Kashmir. He states, "at the present time this kingdom is not much given to faith and the temples of the heretics are their sole thought".[23] And yet, the traveller was deeply impressed by the deep learning of Kashmirian scholars. This deep learning of the country's scholars was the chief reason why Hiuen Tsiang stayed and studied in Kashmir for a period of two long years.

21. *Gilgit Mss.*, Vol. I, pp. 22, 23, 24.
22. Baka, Narandraditya, Khikhila Pratapaditya, Jayendra, Samdhimat are some of the notable kings.
23. Beal: *Si-Yu-Ki*, p. 158.

That such scholarship should prevail even during a period of decline, speaks volumes in favour of the Kashmirian love of learning. Some of the great scholars of this period were : Chandragomin, Sarvajnamitra, Santiprabha, and others. Chandragomin flourished during the sixth century A.D. Sarvajnamitra, the author of the *Sraguharastotra* during the eighth century, Visesamitra, Prajnavarman, and Acharya Sura very probably lived under Jayapida. Final decay overtook Buddhism and its learning with the coming of the Utpala dynasty to power in 857 A.D. During this period the new ideals that were taking birth in the preceding years, i.e. under the Karkota dynasty, took a definite form in the Saiva cult. Henceforth people were more attracted to Kashmir Saivism than to her Buddhism. The appearance of this new faith is perhaps the chief reason why Buddhism decayed in Kashmir during this period though the royal patronage offered to it now was much better than in most of the preceding ages. The dying embers of this fast fading Buddhism produced an illuminating flame in the person of the versatile Ksemendra. No history of Buddhist literature is complete without a reference to his *Avadan Kalpalata* completed in 1052. The book is still held in great esteem in Tibet and was translated into Tibetian under the patronage of Kublaikhan. The text with Tibetian translation was edited in Biblothica Indica, Calcutta, in 1888 by Sarat Chandra Dass. A German translation into verse has been made by Hermann Francke.[24]

The contribution of the Kashmirians to the promotion of Buddhist learning was large and of a high order. It looks surprising how within a very short period of time the Kashmirians could not only acquire proficiency in the new religion, but also contribute to its various branches so immensely as to make a permanent mark upon it. The Buddhist philosophy which arose in Magdha, under the inspiration of Lord Buddha and developed under the scholarship of his venerated disciples, was completed in Kashmir. Say the editors of Gilgit manuscripts :

"Kashmir offered good opportunities for study and research, and consequently for the growth of Buddhist monasteries as centres of learning. The Sutra and the Vinaya Pitakas did no doubt take shape in Magdha in pre-Asokan days, but the development of Abhidharma Pitaka must be delegated to a post-Asokan date and to regions outside Magdha. Kashmir appears to have been the earliest centre where this supplement to the Sutra Pitaka emerged ; it is for this reason that the Kashmirian Buddhists were referred to mostly as Abhidharmikas. The Vibhasas might have been expository commentaries in general form, but it must be admitted that the texts dealt more with Abhidharma topics than with comments on the Sutras. The Abhidharma text of Sarvastivadins, a gist of which has come down to us in the masterly treatise of Vasubandhu, the *Abhidharma Kosa* and *Bhasya* and its *Tika* written by a Kashmirian prince Yasomitra reveal what a large amount of contribution of a subtle character had been made to the stock of knowledge relating to the analysis of mental states of a Yogin. The appearance of the Atmaka theorists, the Vatsiputriyas, is also associated with Kashmir showing thereby the large amount of latitude allowed by the country for philosophical discussion and expression of new thoughts. Still more remarkable is the harmonious existence of Buddhism and Saivism side by side without acrimonies and persecution. The

24. Winternitz : *History of Indian Literature*, p. 293.

credit of Kashmir lies not only in its being a cultural centre for Buddhistic studies, but also in being a centre for the dissemination of Buddhist and Hindu cultures in countries abroad." [25]

The peculiarity of the Indian thought and culture is that it is always in a process of evolution. At different times and places, under different stimuli it took different shapes. The many *isms* that arose in India are only the various aspects of this one dynamic process of the evolution of Indian thought. Buddhism is one such notable milestone in its process of evolution. All that Lord Buddha did was to present through his personality a consummation of all that was best in the spirit of his age. Writes T. W. Rhys Davids "Like all other leaders of thought, he was the creature of his own time and it must not be supposed that his philosophy was entirely of his own creation." [26] We therefore cannot take Buddhism in isolation, as a single movement of thought. It has to be looked at in its proper context, as an aspect and a notable milestone in the evolution of Indian thought. And in the process of evolution, growth and decay go hand in hand. The growth of Buddhism was as much a necessity as its decay. The causes that had given birth to it are the very causes that ensured its death. To seek the causes of its decay in such excuses as a hopeless inward decay [27] and so on is to ignore the vital question, "How came it that the Buddhist philosophy was no longer able to hold its own position but had to give way to the advancing knowledge of the new era of speculation ?" [28] The truth is that Buddhism in India is not dead. It lives. Only, the Buddhist stage of Indian thought is over. Buddhism lives in the succeeding aspects of Indian thought as much as Vedism or any other *ism*. Even Sankara is termed Pracchanna Budha. In fact it is impossible to understand the succeeding *isms* of the Indian thought in the absence of Buddhist culture. This is specially true of Kashmir Saivism to which we shall turn now.

3. *Kashmir Saivism* Kashmir Saivism made its formal appearance by the end of the eighth century. Scholars, however, maintain that Saivism as such is far older than this date. Shri J. C. Chatterji, in his Introduction to *Kashmir Saivism*, opines that its beginning may have to be traced in the Vedic revelations. Dr. K. C. Pandey, believes the fourth century A.D. as the earliest period to which its growth can be traced historically. According to the followers of the faith itself, it is believed to be of eternal existence like the religion of the Vedas.

The religion was founded by Vasugupta. But he gave only the fundamentals of the faith. The philosophy of the system was elaborated, by a noble array of philosophers, the more important among them being : Kallata, Somananda, Utpalacharya, Rama, Utpalavaishnava, Abhinavagupta, Bhaskara, Kshemeraja, Yogaraja, Shivopadhyaya, Pradyumna Bhatta, Mahadeva Bhatta, Srikantha Bhatta, Jayaratha, and

25. *Gilgit Mss.*, pp. 43-44.
26. Davids : *Buddhism : its History and Literature*, p. 34.
27. Barth A : *The Religions of India*, p. 136.
28. Baru : *Prolegomena to a History of Buddhism*, p. 18.

Lakshmana. "The peculiarity of the *Trika* (technical name of Kashmir Saivism) consists," says Shri J. C. Chatterjee, "in the fact that, as a system of philosophy, it is a type of idealistic monism (advaita) and as such differs in fundamental principles from other forms of Shaiva philosophy, for instance, from what is described under the name of Shaiva Darshana in the *Sarva-Darshana Sangraha* of Madhavacharya." [29]

The literature of the *Trika* falls into three broad divisions: the Agama-Sastra, the Spanda-Sastra, and the Pratyabhijna-Sastra. Of these the first is regarded to be of superhuman authorship. It lays down the doctrines and the practices of the system as revelations which are believed to have come down (agama) through the ages handed down from teacher to pupil.[30] The second "lays down the main principles of the system in greater detail and in a more amplified form than the Shaiva Sutras without or hardly entering into philosophical reasonings in their support".[31] The third "may be regarded as the manana or vichara sastra, i.e. philosophy proper of the Trika. It deals rationally with the doctrines, tries to support them by reasoning and refutes the views of opponents." [32]

The *Trika* upholds, as its name indicates, the existence of "three Ultimate principles, viz. (1) Siva, the Supreme all-doing, all-knowing, all-sustaining Being called Prakasa, (2) Sakti, a personal entity of the nature of Perfect Egoity, and (3) Anu, the individual soul under the bondage of impurities of limitations. Of these three, the exponents of the *Trika* school have brought into prominence the idea of Sakti, the second Tattva, by a thorough and systematic analysis of the nature and development of its concept and significance in their particular branch of Indian religious thought".[33] The principle of Sakti is not unknown to the other systems of Indian religious thought. Its evolution has been traced in the Vedic and Buddhistic literatures, the Upanishads, the Puranas, the Mimansa, the Samkhya and even the Advaita of Sankara, as well as in some Saivatic systems like the Vira-Saivas, etc.[34] But its most comprehensive treatment has been attempted by Kashmirians alone.

The peculiarity of the system consists in the fact that it is a type of idealistic monism which admits of the existence of no other indentity besides Siva, the Ultimate Reality. Taking its stand upon this firm basis the Kashmirian philosophers evolve new definitions and offer fresh explanations to age-old problems, e.g. the universe, its origin, its cause, its relation to the Supreme Reality, and of other subsidiary questions

---

29. *Kashmir Saivism*, pp. 37, 38, 39.
30. *Ibid.*, p. 7.
31. *Ibid.*, p. 15.
32. *Ibid.*, p. 17.
33. Das: *Sakti or Divine Power*, p. 59.
34. (*a*) A most illuminating discussion of the evolution of the idea of Sakti is given in 'Sakti or Divine Power' quoted above.
    (*b*) Dr. B. Bhattacharya, an authority on Buddhist Tantras lucidly traces the introduction of Sakti Principle in Buddhist Tantrism in his Guhyasamaja, one of the earliest and most authoritative works on the subject.

such as Pursha and Prakrti, as well as that of Maya, the most difficult knot of Indian philosophy—to name a few that concern us here.

Kashmirian Siva is not " a mere sundered abstraction " similar to the conception of the Changeless inert Brahman of Advaita Vedanta. He is all-doing, all-knowing, all-sustaining. He is endowed with such attributes as make him organic with the world's needs. For instance, He is possessed of Sakti, the Power which He uses to create, uphold and withdraw the universe. As to the relation of Sakti to Siva the system maintains that Sakti has no independent existence of Her own because She cannot exist except from the point of view of the cognizer. " The Sakti ", says the *Malinivijyatottara*, one of the most authoritative works of the system, " again is not different from the Saktiman. Hence this separation does not lead to distinction. In the absence of the state of a cognizer Sakti does not exist. Hence the Real self is not joined with Sakti." [35] Thus Sakti though recognizable apart, has no independent existence of Her own, and yet Siva's Sivahood depends on Her and Her alone, for in Her absence Siva would be reduced to an insentient material object. Therefore from the *Trika* point of view the importance of Siva lies not in His being all-transcending, inexplicable, without attributes, and beyond understanding, but in that aspect of His in which He is closely related to the individual and the universe. Retaining thus the infinite character of Siva, the *Trika* philosophers do not deny the reality of time and phenomena, and by relating it to Siva bring about a harmonious reconciliation of God and the Absolute.

The universe according to this school is real, not unreal. It is the material form which the Divine Free Will born of the Iccha Sakti of Siva assumes. The universe has no standing beyond Siva. It lies inherent in Him when it is unmanifested, and takes the form of the universe when the Iccha Sakti operates. The universe, therefore, is a manifestation of Siva's Sakti and is consequently as real as Siva's Sakti itself.

Consistent with their principles, the Kashmirian Saivas did not accept Maya as an independent identity and, therefore, re-defined Her as one of the Saktis of Siva. Abhinavagupta connected Her with the Supreme Svatantrya power of Siva. " This attempt," says Professor Das, " to interpret Maya from the point of view of Svatantrya which forms the central part of *Trika* speculation is fraught with deep significance. It is only in the Kashmir school that Maya is looked at from this entirely new point of view. In the six orthodox schools of Indian philosophy Abhinava's conceptions of Maya as a power of self-determination in bringing about the appearance of discrete existence of objects can seldom be seen." [36] The Advaitins define Maya as undefinable, indescribable Anirvacaniya. But the Kashmirians, by defining Her as one of the Saktis of Siva, unveil Her of Her Anirvacaniya character and render Her " perfectly describable (or definable) both from the point of view

35. Das: *Sakti or Divine Power*, p. 64.
36. *Ibid.*, p. 142.

of Her true form (Svarupatah) and that of her ultimate originating cause (Karnatah)".[37]

The system explains with equal ease the other problem of Pursha and Prakrti. The best discussion of this problem is to be had in the Sankhya, but even the Sankhya could not convincingly explain it, and left a "wide chasm of irreconcilability of mutual interaction between them by treating them as entirely independent entities of matter and consciousness."[38] "The *Trika* on the other hand overcomes the difficulty by bringing Prakrti under the higher Cetana principle of Kala Sakti."[39]

Thus by taking their stand on the solid rock of absolute monism, by refusing to accept the existence besides Siva of any external agent or agents, like the Maya of Advaitin or the eternal chasm of Sankhyas, and explaining the existence of all that is, as emerging from Siva Himself, the Kashmir Saivas, with a bold stretch of logical reasoning remove all obstacles that beset the path of man's onward march by unmasking them of their ununderstandable and inexplicable character, and by bringing them under the compass of his understanding.

"The aim of this system, like that of Vedanta, is," says Pandey, "to help the individual in self-realisation; and the means also, by which this end is to be achieved, is the same as that of Vedanta, viz. removing the veil of ignorance. But they differ in their conceptions of self-realisation, because their ideas of the apparent (abhasa), the universe, are different. While Vedanta holds that the universe (Jagat) is unreal, the Realistic Idealism maintains it to be real, because it is a manifestation of the Ultimate. Therefore, while according to the former, all that we know disappears at the time of self-realisation exactly as, in the case of an illusion, the snake vanishes when the rope is perceived as a fact; according to the latter, the objective universe stands even when the self is realised, but is known in its true perspective or in all its aspects or bearings. This kind of realisation is spoken of as 'Recognition' (Pratyabhijna). Thus, for the Vedanta, the realisation of the self is coincidental with the negation of facts of experience in the same way as the perception of the rope as a fact is with that of the snake in the well-known illusion. For the Trika, on the other hand, self-realisation brings with it an understanding of the world of experience in its true relation and perspective. There is no negation of the universe, but a new interpretation and appreciation. For this system therefore self-realisation is nothing but self-recognition (Pratyabhijna)."[40]

The exponents of the system claim for it absolute superiority over others. It is held that the system is the latest development of the Indian thought in the religious field and that those who propounded it knew very well the preceding religious systems and were therefore in a position to choose or reject or synthesize the contents of earlier systems in the light of their own times and improve upon them substantially. There are others who maintain that the Kashmirian thinkers "dealt with questions which had already been treated by others and their contributions though interesting do not seem to have touched the

37. *Ibid.*, p. 145.
38. *Ibid.*, p. 149.
39. *Ibid.*, p. 149.
40. Pandey: *Abhinavagupta*: A Study, pp. 172-173.

foundation of belief or to have insured popular movements ".[41] But these and such other sweeping statements are ill-considered and hasty. Those who know something of the system are hesitant to pass such remarks. Messrs. Barnet and Grierson in their Introduction to *Lala Vakyani*, the wise saying of Lalla, a famous poetess of Kashmir, wrote : " Very little is known in Europe concerning the tenets of this form of Hinduism." [42] The learned editors of the *Pratyabhijnahardayam* or the Secret of Recognition have, with unerring judgment, come to the same conclusion. They say : " A final appreciation of the system of Kâshmir Shivaism from the metaphysical, theological, religious—philosophical and epistemological point of view will be possible only after an investigation of the other texts, above all the works of the dogmatists proper —Somananda, Utpalacharya, and Abhinavagupta. Then only will it be possible to solve further problems which have so far been answered in a rather contradictory fashion : We mean the question as to the relation of Kashmir Shivaism to the Shiva Siddhanta of the South and to other Shivatic systems especially the Vedanta and the Sankhya." [43] It is unfortunate that neither the people nor the Government of Kashmir has done anything substantial to place this philosophy before the scholars of the world. For in the last analysis, a proper exposition of the system can be given by none else except the Kashmirians themselves.

Whatever the philosophical worth of the system, we are here, more concerned with the influence it exerted upon the common man and woman. The rise of Kashmir Saivism is the most important event in the history of Kashmir in general, and of the promotion of learning there in particular. The centuries that followed the rise of this faith produced some of the greatest thinkers and writers that Kashmir has ever known. It was an age of originality. It released the creative impulse of the people and the result was that Kashmirians contributed substantially to the stock of Indian art and literature, philosophy and religion and fine arts like architecture, sculpture, painting, etc. These have been discussed in the later chapters of this thesis. This period, i.e. beginning with the eighth century and ending with the twelfth may fittingly be called the Golden age of Kashmirian Learning.

Let us try to find some of those distinguishing features of the system that released the energies of the people so well and so completely.

This system is essentially non-vedic in character, " not because its doctrines are fundamentally opposed to those of the Vedic systems, but because it does not recognise the Veda as the final authority ".[44] Now in India outside Kashmir this was a time when attempts were made to subordinate all thought to the authority of the Vedas. Even the great Shankara was at pains to establish the superiority of the Vedas over everything else. Contrasted to this mental attitude of Sankara and others, the Kashmirian thinkers present an admirable freedom of

41. Elliot : *Hinduism and Buddhism*, p. 224.
42. Grierson : *Lallavakayani* : Introduction, p. 7.
43. *The Secret of Recognition* (Poona Edition), p. 17.
44. Pandey : *Abhinavagupta* : A Study, p. 165.

thought. They do not stoop before the Vedic authority. They hold their heads erect. This unfettered freedom of thought produced a wholesome effect upon society and its institutions.

" Unlike the Vedic system this school knows no caste. It is meant for all in whom the desire for knowledge has arisen."[45] In the history of India this was a time when caste was getting re-established in its stiff and rigid form. But in Kashmir, a persistent, though probably, a feeble cry was raised by the Kashmirian saints and scholars against this unjust and inhuman institution of the Indian society. In the field of education it meant removal of all barriers or differences and offering of equal opportunities for all. This produced its desired effect and education era long became more or less universal.

To Kashmir Saivism the world is not, as discussed earlier, a dream or maya but something real. Kashmir Saivism is alive to the realism of the world and its objective nature. The realistic and objective character of this religion stands in sharp contrast to those systems in which life is presented as an illusion or maya. There exists a world of difference between these two sharply opposite approaches to life. The one creates indifference towards life, the other interest. Naturally therefore to the Kashmirians life is real and life is joy, and this view is amply revealed in their writings. They are not anxious to retire from the world ; instead, they are intensely interested in it. In fact they are anxious to live it and enjoy it. Kalidasa, for instance, does not make Dushyanta, the hero of the Shakuntala, retire from the world. Quite in the same tune another famous writer, Sivasvamin, introduces Buddha himself to advise King Kapphina not to renounce the world, but to continue to " rule his kingdom for the benefit of the Buddha, the Dhamma and the Sangha ! "[46] This sufficiently explains the keen interest that people took in living a full and happy life and in promoting art and literature, song and dance—in fact everything that goes to make life rich and happy.

The realism of this faith helped men to cultivate a scientific and rational attitude to life. It shook their faith in over-ritualism. It saved their intellect and energy from falling into it. One cannot but admire the propounders of this faith when one compares the over-ritualisms of other Saiva sects such as Lakulisas and the Kapalikas, with the simplicity and rationality of Kashmir Saivism. Referring to these in relation to Kashmir Saivism, Sir R. G. Bhandarkar states, " It is a relief now to turn away from this ghastly picture of the wild aberrations of human intellect and spirit to a system of Saivas more human and rational."[47] An identical opinion is put forth by Mr. Barth in his *Religions of India.* He says, " In passing from this system (i.e. the Pratyabhijna of Kashmere), which we know in its learned form, to the sects of the Lingayatas, which is known to us as a popular religion, we

45. *Ibid.*, p. 171.
46. Gaurishanker : *Kappinabhyudaya* : Preface, p. xxxii.
47. H. L. and J. Wackernagal: *Encyclopedia of Indo-Aryan Research*, p. 129.

descend from the heights of the Timacus down to the level of the grossest superstition." [48]

The philosophers of this religion, as stated above, had taken due cognizance of almost all the systems that had preceded it. A proper appreciation of the system, therefore, demanded a thorough understanding of all these. According to the learned tradition it required the knowledge of the six vedic systems of philosophy and of all the Vedas. It also required " a previous study of all the Agamas, a knowledge of the arguments of other dualistic and monistic systems and a command over grammar ".[49] The system obviously placed a very high ideal before the learner.

The system influenced the mental outlook of the people in many other ways. It created in the learner a thirst for knowledge. He had to read much and that too of diverse character. For different subjects he had to approach different teachers. Abhinava, it is said, approached no less than twenty in and outside Kashmir. Again, the learner had to understand his own as well as that of his opponents' point of view. The system, it may be said, created diversity of interest and catholicity of taste. These characteristics developed, in course of time, into one of the most loved traditions of the Kashmirian society.

4. *Kashmir Tantras*: Scholars have found it difficult to define exactly the generic term Tantra. Their main difficulty is that Tantras cover a large range of subjects. Summarising its content Arthur Avalon says, " Its subject-matter is whatever man has thought, said and done." [50] It is none the easier to define Kashmir Tantras for identical reasons. Nevertheless, we can define their boundaries or at least set-forth some of the most important topics that concern us immediately. Generally speaking, the Kashmir Tantras devote themselves to a study of the Ultimate Reality, the Universe, its phenomenon and the individual in relation to both ; they postulate an aim of life and then proceed to find ways and means to realise it ; they discuss the different states of development that a Sadhaka (a striver) has to pass through in realising the ultimate state ; and they elaborate various forms of worship and systems of mental and bodily disciplines. In the lower states of development a tantric is said to achieve certain powers with the help of which he can perform charms, recite incantations, heal the sick, scare away the ghosts, tame the wild and so on. The works which discuss these lower states form, indeed, the bulk of the literature.

Philosophically, Kashmir Tantrism is intimately connected with Kashmir Saivism. In fact some of the Tantras, especially the *Malinivijya*, the *Vijnanbharava*, the *Svacchanda*, the *Kamakalavilasa* are considered to be the very basis of Kashmir Saivism. The proximity of the two becomes clearer from the fact that the highest authorities on Kashmir Tantrism are also the authorities on Kashmir Saivism. The one is not,

48. Barth: *Religions of India*, p. 207.
49. Pandey: *Abhinavagupta*, pp. 171, 172.
50. Arthur Avalon: *Principles of Tantra*: Preface, p. xix.

therefore, very different from the other. It may, however, be said that Kashmir Saivism represents the refined and idealized aspect of Kashmirian religious thought and the Tantras represent the practical aspect of it, and strive to provide means with the help of which the religious principles of the former could be realised in actual experience.

To get an idea of Kashmir Tantric ideology it looks important to state the chief arguments of some of its most important works. The country, it may be stated, has produced more than one type of Tantric literature. The most important, however, belongs to the Sakta or the *Trika* school. The others are dualistic.

The Sakta Tantras

(a) *The Malinivijya*: The work is considered of superhuman authorship and as eternal as the Vedas. It gives the fundamental principles of Kashmir Tantrism and is held in very high esteem by both the Kashmir Saivites and Tantrics. The work evolves a definite conception of Sakti " upon which the later writers have built a splendid structure of brilliant elaborate dissertations ".[51] Abhinavagupta pays his homage to its authority in these words, " The *Malinivijya* is the essence of the Trika system which again represents the pith and marrow of the different schools of Tantras."[52] Jayaratha, another great exponent of Kashmir Saivism, speaks of it in similar reverential tone. He says, " It occupies a pre-eminent position among and is superior to all the other schools of Shavitic Tantrism."[53]

(b) *The Vijnanabhairva Tantra* This Tantra enjoys an equally high reputation. Its argument is the discussion of the relation of Siva and Sakti. It " opens with a question of Sri Devi to Her Lord Bhairava regarding the real nature and relation of Sakti to Saktiman ".[54] Besides, the work elaborates lucidly the different processes of mental abstraction called Dharanas. These Dharanas are according to the Tantra, the means by which one is able to rēalise the principle of Sakti.

(c) *The Swacchanda Tantra* : The Tantra is one of the best mantrasastra. This is how Pandit Madhusudan Kaul, its learned editor, describes it : " What with its facinating treatment of the Ritual or Saivitic initiation, what with its description of charms, and Mantra Sakti, and lastly what with its dealings with the occult and wonderous powers of Yoga, *Swacchanda* Tantra ranks high among other Tantras as it chiefly aims at the realisation of the Adwaita Tattva or the height of spirituality which is but an unalloyed Bliss."[55]

(d) *The Kamakala Vilasa* : The author of this celebrated work is Sri Punyananda Natha. The work gives poetic description of the unfolding of the Divine Creative impulse. It starts with describing that state

51. Das S. K.: *Sakti or Divine Power*, p. 60.
52. Kaul M.: *Malinivijya Tantra*, p. xviii.
53. *Ibid.*, p. iv.
54. Das S. K.: *op. cit.*, p. 84.
55. Kaul M.: *Swacchanda Tantra* Introduction, p. ix.

in which the Devi holds absorbed within Herself all the thirty-six Tattvas of which the universe in all its variety is composed, and then discusses how it comes into existence by the Kama or the Creative Will of the Devi. The work is of great value because it gives a clear and succinct account of the initial development of Sakti and of the great Sriyantra.[56]

(e) *The Tantraloka* : This is the work of the famous *Trika* philosopher Abhinavagupta. In point of importance this is one of the most important. It closely follows the *Malinivijya*, but explains and elaborates its principles. The author takes up the important question of reconciling the concept of God and the Absolute. He discusses the need of endowing Siva with Sakti most comprehensively. He says that the concept of Sakti is equally necessary with the concept of Supreme Siva, " because without this conception of His lordly nature Siva would lose His essential character as Mahesvara and a conscious principle. As He would have to remain always in one definitely fixed character like a jar of clay He would have to be a material object ".[57] Abhinava has been called the Sankara of Trika and it is partly in the *Tantraloka* that he finalises the various aspects of both Kashmir Saivism and Tantrism.

(f) *The Tantrasara* : This work also comes from the same author. It is an epitome of the *Tantraloka*. The author himself says this, " My *Tantraloka* is voluminous and as such its study will be trying to people of less assiduous habits. The *Tantrasara*, which is an epitome of the *Tantraloka* will on a lower scale be as useful to the reader as the latter work. "[58]

(g) *The Saradalika* Lakshmana Deshikendra is the reputed author of this work. It appears that by the time Lakshmana wrote this work, Tantric literature in Kashmir had grown in bulk and diversity. This can be inferred from the following statement of his authoritative commentator Raghava Bhatta. He says, " Lakshmana was impelled to write the work because of his compassion for men who wanted to know something about all the different forms of worship, but could not do so because of the voluminousness of the different Tantras, each of which dealt with a single form of worship and because of the abstruse character of the same."[59] The work is a compendium of the Tantras extant in the author's time. It has twenty-five chapters and deals with the theory and practice of Tantric worship. The author begins his work with a confidence which at once indicates the authority he holds over the subject he treats of. He says, " I shall speak the beneficial *Saradatilaka* which is the essence of Tantras, the first cause for the attainment of Dharma, Artha, Kama and Moksha (religious merit, wealth, desire and liberation) ."[60]

The work became very popular both in and outside Kashmir. It is still held in high esteem by the Bengal Tantrics of Sakta school, and in their works on Tantrism it is quoted as an unquestionable authority.

---

56. Arthur Avalon : *Kamakala Vilasa* : Introduction, p. 5.
57. Das S. K. : *op. cit.*, p. 81.
58. Kaul Mukund : *Tantrasara* : Introduction, p. v.
59. Arthur Avalon : *Saradatilaka*, p. 2.
60. *Ibid.*, p. 63.

(h) *The Hardaya-dipika* : Amrtanandanatha is the author of this work. "The dipika," says Kaviraj Gopinath, its learned editor, "together with *Kamakala Vilasa* is calculated to give an insight into the ideas of Kashmir thinkers on the very intricate problems of Upasana connected with the secrets of Kamakala on the one hand and with those of creation on the other." [61] Amrtanandanatha was a disciple of Sri Punyanandanatha.

(i) *The Cidgagna Candrika* The Tantra is not an original treatise, but discusses the known principles in a very luculent way. The work is a sort of commentary on *Kramastuti*, the work of Sri Sambhunatha, the guru of Abhinavagupta. Sakti in this Tantra is known as Adya Sakti, and the work is an eulogy of the Devi in this form. The work is attributed to Kalidasa but on no sure grounds.

Some other important writers of this system whose works have not been mentioned here are : Jayaratha, Kshemeraja, Manjunatha, Rajanaka, Ramakantha, Sri Adyanatha, Sambhunatha, Somananda, Utpaladeva, and Yogaraja.

Dualistic Tantras

Before we deal with the Tantras of the dualistic school it looks necessary to know something about the dualistic religious thought in the country. In the evolution of the Kashmirian religious thought which bore its finest flower in the form of Idealistic Monism, the daulistic school of Sri Sadyojyotih forms an important milestone. The author flourished in the eighth century and is the chief representative of the dualistic thought now available. He sets forth his views in his book the *Nareshvapariksha*. "The title of the book itself as meaning an examination of the individual soul and the supreme indicates that it is a work on dualistic school." [62] The author tries to establish the independent existence of the individual self as a knower, doer, and enjoyer of the fruition of his actions and as different from the Lord. He cannot entertain the idea that "Cognition and the cognized can at any level be regarded as co-existent or identical". [63] With regard to the relation of the individual and the Supreme Reality he proves the inferiority of the individual soul to the Supreme and alleges that the former cannot replace the latter. Man, he believes, is limited in his power or is at least inferior to that of the Lord. He, therefore, cannot achieve salvation for himself and has to depend upon the grace of the Lord for it.

Some other important writers of this system are Ramakantha, Narayankantha, Vidyakantha, and Ramakantha. Most of the works of these writers have been published by Shivagama Sangha of Madras and the Kashmir Research Department, Srinagar.

The most important Tantric work of this school is *Mrgendra Tantra*. According to this Tantra "the Lord is immune eternally from bondage,

---

61. Kaviraj G. : *Herdaya-dipika* : Introduction, p. 2.
62. Kaul M. : *Nareshvapariksha* : Introduction, p. 2.
63. *Ibid.*, p. 2.

whereas the individual soul is always in fetters until realisation dawns and complete unfoldment of the supremacy of God takes place ".[64] The system discussed in the Tantra is closely related to Pasupata system which, of course, is a very old system. The Tantra is an abridgement of a larger and earlier work *Kamikatantra.*

Kramadipika is a Tantra of the Vaishnava school. It lays down the principles for the worship of Gopal-Vishnu. The devotee is directed to concentrate on his Lord in a peculiar form. Elaborate rules and rituals are prescribed for ensuring success. The author of the work is Kesav Bhatta.[65]

The above-mentioned are some of the most important works on Kashmir Tantrism. Tantric literature in Kashmir is voluminous. An idea of its popularity can be had by a reference to the Tantrik section of the catalogue of Sanskrit Manuscripts in the Rughunatha Temple Library, Jammu.[66] The other works have been omitted not because they are less important, but for sheer considerations of space.

Much work, unfortunately, has not yet been done in the field of Tantric literature. It has, for instance, not been discussed historically, and serious attempts have not been made to trace the influence of one school over another. To state categorically, therefore, the extent of the influence of one school over another is naturally difficult. It is, however, not as difficult to trace in a casual way the existence of some sort of influence of one over another on the strength of occasional references here and there.

On Vira-Saiva School A study of the Kashmirian and Kanarese religious systems led Dr. Barnet to state in the *Siddhanta Dipika* that at the beginning of the eleventh century the theological ideas of Kashmir Saivism of the North " penetrated southward into the Kanarese country and leavened the native Saiva faith of the Vira-Saivas into a revolutionary ferment ".[67] Professor S. K. Das who has made a thorough study of both these systems has an identical opinion to offer. He says, " So great was the influence of the Kashmir school of thought on the Vira-Saiva system that we find many of their ideas and even technical terms are actually borrowed and incorporated in their exposition of the principle of Sakti." [68]

On Bengal Tantras : Bengal is considered to be the very home of Sakta Tantra. And the fact that the Kashmirian *Saradatilaka* enjoys much popularity and unquestionable authority in this school is at once a high tribute to the sublimity of its thought. It has however to be stated that, whereas there has been no reciprocal influence from the

64. Kaul M.: *Mrgendra Tantram*: Introduction p. 1.
65. Niwasacharya: *Kramadipika.*
66. Stein: *Catalogue of Sanskrit Manuscripts in the Rughunatha Temple Library*, Jammu, pp. 226 to 239.
67. Barnet L. D.: *Siddhanta Dipika*, Vol. XI, p. 65.
68. Das S. K.: *Sakti or Divine Power*, p. 215. (A vigorous exposition of Vira-Saiva school has been brought out by Mr. S. M. Hunashal in his *The Lingayata Movement.*)

Vira Saiva school upon the Kashmirian thought, the Bengal Tantras have considerably influenced the Kashmirian. Of the Bengal systems, the influence of the school of Matsyendranatha was keenly felt in Kashmir quite early.

The Tantras possess certain distinguishing features which deserve special mention.

The most distinguishing feature of Kashmir Tantrism is its comprehensive outlook on life. It starts with the individual and evolves the whole structure of its philosophy in relation to him. God, Universe and the individual are all viewed in an organic relation.

It does not, as stated earlier, concern itself with that aspect of God which is beyond thought and reach, but with that aspect of His in which He is intimately connected with the individual as well as the universe. It does not confuse human thinking by defining the universe as neither real, nor unreal, but something undefinable and indescribable.[69] It does not preach that all is impermanence and life is suffering.[70] In fact it associates the very existence of the universe with that aspect of Siva in which He is known as the Supreme Enjoyer. "The God of unsurpassed blissful joy," says Abhinavagupta, "is called the enjoyer (Bhokta) Desire, such other contents of his self are His enjoyables (Bhogya). For this reason alone he assumes the state of Sakti." [71]

The system believes in the existence of individual self. This also stands in sharp contrast to the Buddhist belief which refuses the existence of individual self. To the Buddhists the assertion of individuality is tantamount to ignorance. They define ignorance as assertion of self. "By ignorance," says Yamakami, "Buddhism understands the assertion of self, which is the root of all evils." [72] But the Kashmirian Tantras not only believe in individual self as a real knowing, willing and doing entity, but also equates it with Sakti, the inner nature of Siva. The assertion of the existence of individual self forms, indeed, the very cornerstone of Tantric literature. No wonder, therefore, that the Tantras lay all the emphasis on the development of individuality. The conception of this individual development, is not, as one may hurry up to presume, identical with that of the West. The two stand distinctly apart. The Western conception aims at the development of individuality "in and through" society. This definition doubtless provides unbounded scope for individual development, but it does not postulate any meeting point or common ideal for different individuals and societies. Such a conception is fraught with the danger of segregating individuals and societies for there is nothing in it to check different individuals and societies from going in opposite directions, thus leading the world either to war or to chaos. What is happening in the West today is not a mere matter of chance, nor is it the guilt of this or that 'wicked' nation;

---

69. Advaita view.
70. Buddhist view.
71. Das S. K.: *Sakti or Divine Power*, p. 65.
72. Yamakami: *Systems of Buddhistic Thought*, p. 283.

it is her educational thought in actual practice. The Tantric conception of individual development is not so vague. It lays due emphasis on the development of individuality, but lays greater stress on defining the ideal that that individuality is to attain. It thus guards against the dangers of chaos by placing a common ideal for all. As to the ideal itself, the Tantras are equally clear. From Siva, they argue, the Jiva emerges and to Sivahood He must attain. Godhood is, therefore, the ideal that Tantras suggest for man. To attain this state is not a mere matter of speculation but of actual experience. Indeed it is exactly here that the Tantras differ from other religious philosophies.

Godhood for man, it needs to be stated, is the common ideal of all religious systems of India, e.g. Brahmahood for an Advaitin, Tathagathahood for a Buddhist, Sivahood for a Vira-Saiva, and so on, but what is peculiar with the Tantras in general and the Kashmir Tantras in particular is that they lay exclusive emphasis on its realisation. In fact this is the main argument of all Tantric literature. "The importance of the Sakta Tantra," says Sir John Woodroffe "may be summed up by the statement that it is the Sadhana Sastra of Advaitavada." [73] To lay out an aim of life and simultaneously to suggest means for its realisation is thus one of the most distinguishing features of Kashmir Tantrism.

Of the modern critics many may disagree with the means that the Tantras suggest, but most will concur with them in the emphasis they lay upon having a sublime ideal of life. And, if man at any time resolves to fix up an ideal for himself one wonders if he can conceive of a better one. One may question it on the grounds of impossibility, yet could one aspire for a better one ? What a world would it be if man were to set himself to the task of cultivating Godly attributes, and what a vocation education would be if it were to set itself to the task of finding means for its realisation.

Kashmirian History as discussed in the pages of this thesis amply shows that those periods of her life which were influenced by the Tantric ideals with its emphasis on realising the Supreme state of Godhood were not only the most fruitful in different activities of life including education, but some of the noblest ones in which the people engaged themselves in pursuits of peace and things of beauty. This, however, is not to say that everything in the Tantras is good and sublime. It looks as unwise to defend the Tantras to their last injunction as it is foolish to throw overboard the whole as obscene and unworthy. The truth is that in the process of evolution, error must accompany achievement and failure, success. Shortcomings in the literature there must be, and it is necessary to study them. But what is more important is to discover what they have to teach and this is actually what all those scholars whose opinions are entitled to respect say. Dr. B. Battacharyya who is one of the pioneers to take in hand the study of Buddhist Tantras has fully brought out the importance of this literature in the various Introductions to Buddhist Tantric works, e.g. The Sadhanamala, Guhyasamaja, etc.

---

73. Woodroffe : *Sakti and Sakta*, p. 41.

and Sir John Woodroffe, an authority on the Hindu Tantras, has an identical opinion to offer.

5. *Aims and agencies of education in ancient Kashmir*: With this background of religious history in view, we shall now proceed to study the history of education proper, and begin the investigation with a description of the aims and agencies of education during the period under review.

(a) The *aim of education* in ancient Kashmir was to develop character and purify life. It was necessary to cultivate deep scholarship, contribute to the various branches of learning and formulate new ideas and ideals ; but all these were sub-ordinated to and used as means for achieving the ultimate aim which was to sublimate man to higher and higher planes of purified life. The Tantric conception of this purified life, as described earlier, was to attain Sivahood or Godhood. Therefore, whereas proper attention was paid to the cultivation of learning, emphasis was laid upon co-ordinating it with human behaviour, and progress in scholastic attainments did not mean much unless it resulted in moulding behaviour. Practical steps were taken to make this worthy aim a real success, and no scholar however great was recognised as such on the basis of his scholastic attainments alone; the other equally important condition for this recognition was to prove how far his scolastic attainments had moulded character and conduct. To this severe test all scholars were put to, and not even a Sankara could claim exemption. The tradition, as recorded in the *Sankara Dikvijya*, has it that when Sankara went to Kashmir to earn for himself the highest honour of being recognised the greatest all-India scholar of his age and enjoy the unique honour of being allowed to sit on Vidyabhadrasana, the throne of learning, he had to satisfy the Pandits there not only about his scholastic attainments, but also the purity of life. Sankara, says the tradition, satisfied the Pandits about his scholastic attainments and they forthwith allowed him to enter and sit on the throne of learning. But as he moved towards it, came a voice from the Goddess Herself saying, " There is no doubt about your omniscience, but omniscience is not the only condition for sitting on the throne of learning. There is also the condition of Parisuddhi—purity of life, whether you have it or not is yet to be considered." [74]

The Kashmirians, so long as they remained true to this noble ideal, not only contributed richly to the various branches of learning, but also gave birth to noble men and women who served the cause of humanity at home and abroad. And as soon as they fell away from it decay overtook them and their society collapsed.

(b) *Viharas*: As stated earlier, a systematic effort to spread education in Kashmir began with the introduction of Buddhism. The Buddhists started schools and colleges for the education of their monks. But in course of time these were thrown open to all. The seats of Buddhist

---

74. Srividyaranya: *Sankara Dikvijya*, XVI, 83.

learning were known as Viharas. They were residential institutions. The teachers in charge were keenly interested in the cause of education. The interest and efficiency with which they worked made these Viharas famous. They produced great thinkers and philosophers, and we have seen how ably they contributed to the stock of Buddhist Philosophy.

As the fame of the Vihara spread students began to come to Kashmir for study from distant lands. Kumarajiva travelled all the distance from Koutcha, modern Khotan, in Central Asia, and studied in Kashmir under the celebrated teacher Bandhudatta for three years. Next came Hiuen Tsiang who studied for two years. He speaks very highly about the Kashmirian scholars, and is proud of the education he received there and boasts of it at Nalanda.[75] He records that he saw one hundred Viharas and five thousand monks. Hiuen Tsiang was followed by another Chinese scholar O'Kong. Moungti or Muktipida Vihara at Huskapura is thought to have been his first place of rest and study in the valley. This Vihara has been identified by M. A. Stein with the one founded by King Muktipida also known as Lalitaditya, at Huskapura.[76] By the time O'Kong visited Kashmir Buddhism appears to have grown in strength. He records a considerable rise in the number of Buddhist Viharas. Hiuen Tsiang saw only one hundred Viharas, but O'Kong found three hundred. Hiuen Tsiang studied for two years only, but O'Kong studied for four.

The curriculum at these Viharas appears to have been quite comprehensive and catholic. The country offered facilities for studying a wide range of subjects. We have shown earlier that Kashmir produced great scholars, representing the different schools of Buddhist thought especially those of Hinayana and Mahayana. The study of these schools must have dominated the curriculum and necessitated a study of the Pali language. That this language was cultivated by the Kashmirian is established by the discovery of Gilgit Manuscripts which are in Pali. Late in the ninth century, Prakrit also came into use in the Buddhist schools and we know this language worked against the background of Sanskrit. Curriculum, be it noted, was not sectarian. It did not neglect Hindu subjects. Besides, subjects like grammar, logic, literature were common to both Hindus and Buddhists. With the growth, however, of Kashmir Saivism, the Buddhist curriculum appears to have been dominated by the Saivitic one.

(c) *Mathas* : Mathas, like Viharas, were residential institutions for higher learning. Viharas were mainly attended by Buddhist scholars. But Mathas were characterised by a broader outlook and were attended by all. Originally they appear to have been hospices for foreign and local travellers and saints. In course of time they developed into Hindu centres of learning. The importance of these Mathas increased simultaneously with the growth and spread of Kashmir Saivism. It was at these Mathas that the profound philosophy of Kashmir Saivism took

---

75. Beal : *Life*, pp. 159-60.
76. Stein : *Itenery de, O'Kong*, p. 5.

form. The Mathas produced great men, scholars, philosophers who substantially contributed to the stock of Sanskrit literature between the eighth and twelfth centuries. It may be stated here that this was the time when Sanskrit learning in India was fast decaying. The efficiency and the interest with which the teachers in charge of these Mathas were running institutions can well be estimated by the quality and quantity of literature that their students produced at a time when the rest of India was more or less in a state of academic inertia.

Mathas became famous as centres of Sanskrit learning. Students from such distant countries as Bengal and Central Provinces and the Deccan came to study. The students received the special attention of kings and nobles. To make their stay easy and attractive students hailing from different areas were housed in different quarters.[77] Arrangements for their sustenance were made by endowing Agraharas to the Mathas where the students would study.

Curriculum at the Mathas offered a larger scope than at the Viharas. The Mathas were associated with Hindu learning. And Hindu learning, as represented by Kashmir Saivism, demanded a high standard of attainment. The learner had to study almost all the religious systems that had preceded this faith. The curriculum, therefore, included the study of the Buddhist as well as Hindu philosophies with all their branches. In addition to these, mathematics, astrology, astronomy, medicine, surgery, politics, history, grammar, poetics, drama, etc. were also studied.[78]

The higher education given in the Viharas appears to have emphasized a proficiency in Pali—the sacred language of Buddhism. This is warranted by the discovery of Gilgit manuscripts which are in Pali. Some of the Kashmirian Buddhist writers, as for instance, Sivaswamin wrote some of his poems in Prakrit. Professor Gaurishanker, the learned editor of one of his poems, the *Kapphinabhyudayan*, tells us in the preface of that book, that the poet was equally at home in Sanskrit as well as Prakrit. The topic of instruction in the Mathas was Sanskritic but the medium of instruction at the elementary stage was the vernacular which was a form of Prakrit. It looks that the Mathas did not pay much attention to the development of the spoken language as no standard book on any subject has come down to us from that period. This is true of other regions in India where Sanskrit studies flourished. The medium of instruction was always the local language, but the local contribution has always been not in the language of the place, but in Sanskrit. And no wonder, for from times immemorial uptil about the thirteenth century Sanskrit was the language of intellectual intercourse between the various parts of India. To gain recognition, therefore, it was necessary to write in Sanskrit.

A notable feature of ancient Sanskrit learning in Kashmir was the emphasis it laid upon the quality of education. For this purpose a very high standard of learning was maintained both at the Mathas and

---

77. Pandit: *Rajatarangini*, VI, pp. 87, 304.
78. Kaul, M.: *Desopadesa and Nirmamala*.

Viharas, and the teachers to whom were entrusted these institutions were always scholars of established reputation. Hiuen Tsiang who knew them intimately speaks of them in these glowing terms : " This country from remote times was distinguished for learning and these priests were all of high religious merit and of conspicuous virtue, as well as of marked talent, and power of clear exposition of doctrine ; and though other priests (i.e. of other nations) were in their own way distinguished yet they could not be compared with these—so different were they from the ordinary class." [79] The Kashmirian teachers retained their authoritativeness down to very recent times, for in the eleventh century also we find outside scholars looking up to Kashmirians for the approval of their new works. Alberuni has a story of one such scholar.[80] He has yet one more story to show that the Kashmirian scholars were confident of their own efficiency and scholarship and would take up in hand any difficult task even if it be committing of the Vedas to writing.[81]

The quality of Kashmirian contribution to the various branches of learning, the unquestionable authority and deep scholarship of her teachers, and the established celebrity of her educational institutions, all these were not a little due to the emphasis that the country laid on the quality of her education.

(c) *Buildings of Viharas and Mathas* There is ample evidence to show that society took an active interest in helping the cause of education. Religion did not stand in the way. In Kashmir, Buddhism and Saivism flourished side by side. The followers of the one did not persecute the other. On the contrary, they respected each other. Kings and men of means patronised the scholars of both the religions with equal respect. They built Mathas as well as Viharas with equal zeal. The keen interest that society took in providing buildings for the spread of education whether Buddhist or Hindu can be fairly estimated by the numerous Viharas and Mathas that were built by kings, nobles and even ordinary men.

In Kashmir it is not always possible to hold classes in the open, specially in winter. The ancient Kashmirians appear to have been quite alive to this difficulty. The buildings for Mathas and Viharas appear to have been built of strong material, mostly of stone. They also appear to have been quite spacious so as to allow quite a good number of students to congregate together and study. We have no definite information about the size of these centres of learning. But the fact that some of the kings used them for offensive and defensive purposes gives us some idea of their size. Yet these were not sufficiently large to accommodate all the students who flocked to them and many of them had to reside outside the Mathas.[82]

79. Beal : *Life*, p. 71.
80. *Ibid.*, p. 125.
81. Sachau : *Alberuni's India*, p. 126.
82. See Appendix for the list of Mathas and Viharas whose ruins have been identified.

(d) *Educational life* : The boarders worked under the control and supervision of the authorities of the Matha or the Vihara. But they were free to run their own mess and other arrangements. This is illustrated by the humorous descriptions, given by Ksemendra, of the emotional fits of some of the boarders over mess arrangements and other petty disputes.[83]

Fees do not appear to have been levied from students either local or foreign and naturally so, for the institutions were maintained by the State and the society. Neither the taught nor the teacher had to worry about his existence. This, however, does not mean that the institution would not accept the presents that a rich parent would offer.

It is believed that the *session* usually began in the month of Baisakh corresponding to April-May. Baisakh, it may be stated, is the first sunny month after the cold, snowy months of winter. Examinations were held, results declared and diplomas awarded. Kashmir does not appear to have been the only part of India where degrees were awarded to students. Professor Altekar has shown that in Bengal and Bihar also degrees were awarded to distinguished scholars.[84] A particular day in the month of Magha (January-February) known as 'Gauri Tretia' was fixed for awarding diplomas to successful candidates. It is interesting to state that this day is still observed by the Kashmirian Pandits. On this day the family purohit still comes with a 'Diploma' to the sons as well as daughters of his client. It may be of interest to describe this dead diploma as we have it today for it is so akin to a modern certificate in some of its features. The central portion of this certificate gives us a picture of Saraswati, the Goddess of Learning, riding on her spotless white swan, and a few verses in praise of Her. All round we find pictures of elephants. The elephant in India has always symbolised intelligence, strength and magnanimity. In our own times also certificates do have some symbolic signs besides other specific information recorded therein. It appears that the family guru would on this particular day approach the guardian of his pupils and report to them the progress of their children. And the parent would offer him his fees or presents.

Examinations may not have been held as we hold them today. But a pupil could not pass on to the next book unless he could satisfy his teacher about the thoroughness with which he had mastered the one in hand. In the case of the lowest classes, the teacher himself was the examiner. Most probably he examined his pupils orally. The advanced student had to pass a difficult test. His teacher was not his only examiner. He had to face the 'external' examiners also. The student had to prove his efficiency in a public discussion which was attended by the learned men of the locality, besides his own teacher. A budding poet or writer had, however, to pass a more difficult test. He had to submit his book to a learned assembly for consideration. The assembly

83. Kaul M.: *Desopadesa and Nirmamala*, Introduction, p. 9.
84. Altekar: *Education in Ancient India*, pp. 157, 278.

would hold a sitting and present the book to its members for examination. The members of the assembly would include not only specialists in the particular subject, but also men of diverse tastes and interests. A modern examiner may not approve of the inclusion of non-specialists in such an assembly, but such an assembly also has its own value in so far as it avoids narrow specialisation.

The holding of *literary assemblies* by the learned in Kashmir was one of the most useful means of preserving, promoting and disseminating higher learning and thought. The poet Manka has carefully recorded the traditional way in which such assemblies were held. He gives a faithful picture of the sittings of these assemblies as well as the interests and qualifications of the members in the later Sarga of his book the *Srikanthacharita.* One of the most important and significant characteristics of these assemblies was its catholic and comprehensive nature. The meetings held at these assemblies were not those of narrow-minded specialists who could not appreciate or participate in each other's vocation, but those of broad-minded individuals.[85] Such meetings were held quite often in those days. "Doubtless," says Keith, "such an assembly must have represented with great accuracy the meetings common in the days of Kalidasa and earlier ; the similarity to those familiar to us from Statius, Juvenal, Martial and Pliny is striking and interesting." Such assemblies exerted wholesome influence upon the growth of the thought of the society. It co-ordinated the diverse and often conflicting points of view of the specialists. It maintained the equilibrium of the thought and saved it from the dangers of over-specialisation and loss of balance between the diverse factors. It is the loss of this balance in thought that is one of the main causes that has plunged the world into an abyss of chaos and disorder. What the present world needs most today is an even balance between economic, political, scientific, artistic and social and religious powers so that none of these forces become omnipotent and dominate the growth of man.

(e) *Libraries and Books* The earliest reference to the building of an edifice for placing books and office records is found during the reign of Narendraditya who ruled in Kashmir somewhere in the fifth century A.D. Libraries, however, were attached to each Matha and Vihara. Some of the Viharas possessed big libraries. Hiuen Tsiang tells us that the king of Kashmir placed at his disposal the services of twenty clerks for copying books from the Buddhist libraries.[86] Preservation of a book in ancient days when paper and printing were unknown was an absolute necessity. Scholars used to take all possible precautions to save their books from the effects of cold and heat. In Kashmir, where people were very much interested in education, most of the houses possessed small libraries of their own. The habit of preserving these has persisted down to our own days. When G. Buhler reached Kashmir in search of Sanskrit manuscripts, he found "all the Sanskrit speaking

85. Buhler : *Report,* p. 50.
86. Beal : *Life,* p. 69.

pandits, as well as some of the traders and officials "[87] in possession of a large or small library.

In Kashmir, paper, of course, was not available and books were written on *Bhurjapatra* or the bark of birch tree. There was no dearth of this tree in Kashmir and the patra was available in ample quantities and at cheap rates. In fact Kashmir supplied this writing material not only to her own people, but also to the people living all round. The discovery of Bower Manuscripts in the far-off regions of Central Asia and other manuscripts discovered in other parts of Asia corroborates this. The choice of this material for purposes of writing has proved very useful on account of, firstly, the abundance in which it was available, and secondly, its enduring qualities. May it be stated here, that Bhurja-patra does not decay in water or under earth, nor is it eaten up by any insect. It should not be a little interesting to state that many books that were concealed under earth or thrown into wells by the Kashmirian pandits with a view to save them from the destructive hands of some of the unwise kings and other fanatics, were safely unearthed after many centuries.

The *ink* used was non-washable, obviously designed to suit the enduring qualities of Bhurjapatra. This meant that a book once written would continue to serve for a long time and be used by a number of generations. It also facilitated collection of books for the family library as every generation would copy out a new book and place it by the side of the older ones. This is the chief reason why books were amply available in ancient Kashmir and why each family with the tradition of learning behind it could afford to possess a small library of its own. And it need hardly be stated that the availability and enduring qualities of writing materials and books considerably helped the spread and promotion of learning. The importance, therefore, of the Bhurjapatra before the discovery of paper need not be overstressed.

The *pen* to write with was a local reed. It could be mended to suit the writer's need. During the Muslim times, a new variety of this reed was introduced by the Persian immigrants. This variety is still in use both among Hindus and Muslims, and is known as 'Farsi Kalam' or Persian pen. The local reed, however, could not be banished and still enjoys the privilege of being the only pen with which primary school boys write.

The *script* for writing was not Devanagri. A different script, Sarada, was evolved and is still the script of those Kashmirian pandits who are Sanskrit scholars. The origin and development of this script in Kashmir still awaits investigation at the hands of competent scholars. Usually, however, it is believed that since Kashmir was known as Saradapitha, the script was named Sarada.

Books, sacred or profane, it will astound the orthodox in India, were *bound in leather* with a view to preserve them longer. And this

---

87. Buhler: *Report*, p. 27.

emphatically shows that the people were anxious to preserve books even if it meant over-riding religious sentiment or even sanction.

When decay overtakes a country it loses the power to think clearly and act properly. This is what exactly happened in Kashmir during the later period of the Hindu rule. The warring princes, busy with petty political and economic feuds, used these centres of learning for offensive and defensive purposes. Incidentally we may note that the attention paid to the building of Mathas and Viharas appears to have been much more than was paid to the buildings of royal palaces. That these educational institutions were used by some unwise kings for purposes of carrying on wars also shows that they were in many cases stronger than even their palaces. As a result of thus being used for such purposes, most of these institutions were burnt down or severely damaged. We know these institutions possessed large libraries. Vast treasures of human achievements evolved during the preceding centuries and preserved for us by the painstaking students in these libraries also perished, thanks to man's lust for power and pelf. This destruction, begun in the later period of Hindu rule, was carried to completion by the unfeeling hands of man during the following centuries. This is one of the chief reasons which explains the strange disappearance of these ancient institutions as well as the present paucity of the ancient books in Kashmir. The few that have survived remind one of their vanished glory as well as immortal wisdom.

(f) *Elementary Education* In Kashmir, though the average man appears to have achieved a high standard of learning yet there must have been a large section of people who could not afford to devote so much time and energy to education and who must have been content with a sort of elementary education alone. This education was imparted in private schools run by Brahmins in their houses. The Brahmin would use a part of his house for the purpose. Pupils would come, read their lessons and return. An elaborate system to provide for the education of each child of school-going age appears to have been evolved by the Kashmirian society. Each family used to have its own family teacher. The whole society was thus divided among the class of teachers with whom the profession was hereditary. This was an ingenious method. On the one hand it ensured the education of every child of school-going age at the house of his family guru and, on the other, it ensured an easy living for the teacher at the hands of a permanent clientele. These family gurus exist even now, but they no longer cater to the needs of the education of the children of their clients.

Rich families used to engage private teachers for their children. We do not know what fees were paid to these tutors. But we know that they were held in high esteem. Suyya, one of the first rank engineers of ancient Kashmir started his career as a private teacher. He was a learned man and was respected by the parents of his pupils. Probably it was through the good offices of these parents that his fame reached the royal court and the king. If Suyya can be taken up as a

representative of the community of private teachers, we may say that the private teacher enjoyed a good social status.

6. *Education of Kashmiri Kings* : Particular care was taken of the education of the princes in ancient Kashmir and many kings figure as great grammarians and poets. King Megavahana (fourth century A.D.) was a great scholar in Buddhist religion and philosophy ; Yasaskara (940 A.D.) was a learned Brahmin well versed in the Hindu scriptures ; Harsa (1090 A.D.) a unique figure in Kashmir history, an arch iconoclast, a liberal patron and a poet of merit—was a great vedic scholar, Jayapida (758 A.D.)—the celebrated author of the *Kasika* was a grammarian, and Abhimanyu was keenly interested in the study of the *Mahabhasya* and it was he who re-introduced the study of the *Mahabhasya* in Kashmir. There flourished many royal poets and the names and specimen writings and poems of some of them have come down to the present times. It appears that no other Indian province has produced so many royal poets as Kashmir has. The list of the famous royal poets given by M. Krishnamacharyar has eight Kashmirian poets out of a total of fourteen. From other sources we have collected the names of some more. These are given below : —

DHARMASOKA was the third in ascent from Kanishka of the first Gonanda dynasty. He was a Buddha. His date is not settled.

GONANDA He was one of the three early kings of Kashmir and is supposed to have ruled the country before 240 B.C.

GOPADITYA : He is quoted by Vallabhdeva in his *Subhasitavali*. He was the son of Aksa. He ruled over Kashmir for sixty years in the fifth century B.C.

RANADITYA : He was the son of Yudhisthira and ruled over Kashmir before 522 A.D. He is quoted by Vallabhdeva in his *Subhasitavali*.

LALITADITYA : He was a son of Durlabhavardhana. He ruled in 699-735 A.D. He wrote diadactic poetry. He also is quoted by Vallabhdeva.

JAYAPIDA : He was the son of Vajraditya and ruled over Kashmir in 751-782 A.D. Both Kalhana and Vallabhdeva know him as a great poet.

AVANTIVARMAN : He was a founder of Utpala dynasty and ruled in 855-884 A.D. Vallabhdeva quoted him in his Anthology.

KALASA : He was the son of Anantaraja and ruled over Kashmir in 1080-1088 A.D. Bilhana, Kalhana, Ksemendra and Vallabhdeva—all know him as a great poet.

PRAVARASENA : Pravarasena of the Setubandhu fame is generally identified with the Kashmirian King of the same name who built the first bridge over the Vitasta. He ruled over Kashmir in the first century A.D.

MATRGUPTA : He was a contemporary of Vikramaditya of Ujjain.

History was a special subject of study with the Kashmirian princes. This is suggested by the fact that one of the motives that Kalhana had in mind in writing his chronicle was to supply the kings of Kashmir with a connected history of the country. He observes, "This saga which is properly made up should be useful for kings as a stimulant or as a sedative like a physic, according to time and place." [88] In politics,

88. Pandit : *Rajatarangini*, I, 21.

the Kashmirian kings had evolved their own outlook. They appear to have cultivated the study of Mathematics also as is evidenced by the two cases cited by Kalhana.[89] The study of fine arts like music and dancing was not neglected either. King Harsa was a master of music and an accomplished actor.[90]

The education of the princes was not restricted to liberal education. They were also taught the arts of administration, civil and military ; and sometimes kings would go so far as to abdicate in favour of their sons in order to give them practical training. Sussala (1113 A.D.) crowned his son Jayasimha in his own life-time. Even at the moment of coronation he took care to address him " on the main principles of administration ".[91] Kalasa and Gulhana (Eleventh century A.D.) also were offered such chances. Training in warfare was also imparted and even such occasion as hunting expeditions were used for the purpose.[92]

We do not know if separate schools were set up for the education of princes and princesses ; but they were subject to rigorous discipline and the kings themselves took a very keen interest and supervised their education.

7. *Royal Patronage of Education* The part which the kings of Kashmir played in educating their people is such as leaves a deep impression upon one's mind. It is here that they demand our highest tribute. For, despite their limited means, they showed unbounded generosity towards men of letters. They built magnificent and spacious Mathas and Viharas to serve as centres of study. It was only seldom that a prince was indifferent to this cause. Even the commonest of kings and queens deemed it a privilege, nay a sacred duty, to establish a new Matha or a Vihara or at least repair an old one. Such works saw the culmination of their highest interests.

The injunction of Hindu sages and scholars to the kings of India asking them to help the cause of education in a variety of ways have very succinctly been described by Professor A. S. Altekar.[93] The conclusions arrived at here show that these injunctions were carried out in practice in Kashmir till recent times. The kings patronised poets and men-of-letters. Chandracarya, the famous grammarian, who re-introduced the study of Patanjali's *Mahabhasya*, flourished under Abhimanyu. Chandaka, who probably is the same as Chandragomin and to whom Kalhana pays a high tribute by comparing him to the author of the *Mahabharatha*, lived during the reign of Tunjina.[94] King Matrigupta, who was himself a poet, patronised the great poet Bharthamentha.

The death of king Lalitaditya (695 A.D.) was followed by a period of instability. Learning, during this period, naturally received a set-

89. *Ibid.*, VI, 14-41 ; VIII, 124-156.
90. *Ibid.*, VII, 1117, 1140, 41.
91. Pandit: *Rajatarangini*, VIII, 1232.
92. *Ibid.*, V, 197.
93. Altekar: *Education in Ancient India*, pp. 314-322.
94. Pandit: *Rajatarangini*, VI, 16.

back. But under Jayapida (751 A.D.) normal conditions were restored. "Learning which had vanished to distant lands was made to descend in this land of its origin by him like the Vitasta by Kasyapa." [95] The celebrated sabha of this great patron of learning reminds one of the nine jewels of Vikramaditya. "The king paid his Sabha-Pati, Ubhata, a handsome daily allowance of a lakh of Dinnars." [96] Besides Ubhata, Damodargupta, the famous author of *Kuttinimatta,* Manoratha Sankhadanta, Cataka, Samdhimat, Vamana, were the members of his sabha.[97] He himself was a great scholar. He studied grammar under Ksira, the author of several grammatical treatises and of a commentary on *Amarakosha.* Sankuka, referred to by the Kashmirian rhetorician Mammata and quoted by Vallabhadeva in his *Subhasitavali,* lived under Ajitapida (816 A.D.). Jayapida the last great ruler of Karkota dynasty was followed by a number of weaklings. Then came Avantivarman (857 A.D.), the most popular of the Kashmirian kings. His reign was marked by a number of important changes in the State. He built strong and artistic buildings, dug out canals, regulated the course of the river Vitasta, reclaimed vast areas of waste and marshy lands, and brought peace and plenty to the people. He patronised poets, grammarians, scholars and artists. It was under him that Ramata, Muktakana, Sivasvamin, Anandvardhana, Ratnakara, and Bhatta Kallata flourished.[98] Nayaka,[99] the scholar of the four Vedas and the Superintendent of Sugandhesa Matha flourished under Sankarvarman (884 A.D.), the son of Avantivarman. This king, however, was not a regular patron of learning and our poet-historian Kalhana ridicules him for this and describes the adverse effect it produced on the learned.[100] He says, "Since he averted his face from the society of men of merit through fear of liberality, poets like Bhallata had to resort to low ways of livelihood." [101] The king, however, did not altogether ignore his duties towards scholars, and we find him patronising poets of a somewhat lower order like Lavata. He paid him a small allowance of two thousand Dinaras a day. The reign of Yasaskara was marked by a higher standard of learning among men of different professions. Kalhana has summarized it thus "Astrologer, physician, councillor, guru, minister, ambassador, judge or clerk—none in this era was deficient in learning." [102] Anantadeva (1029 A.D.) and his queen Suryamati patronised Somadeva, the celebrated author of *Kathasaritsagara.* Their son Kalasa patronised the blind singer Mamma. Bilhana who eventually left his home to make a mark outside, also flourished during his reign. In the century that followed, Kashmirian Princes got themselves lost in petty political and economical feuds. They are not seen taking any active part in the spread and promotion of learning. Under Jayasinha, the last of the great Kashmirian kings, flourished

95. *Ibid.*, IV, 486.
96. See Appendix.
97. Pandit: *Rajatarangini,* IV, 495-97.
98. *Ibid.*, V, 29, 34, 66.
99. *Ibid.*, V, 158, 59.
100. *Ibid.*, V, 180, 205.
101. *Ibid.*, VI, 204.
102. *Ibid.*, VI, 13.

Mankha [103] and our historian Kalhana, though the latter does not seem to have received any patronage from the king.

This royal patronage was not restricted to the scholars and writers of Kashmir alone. It was extended to foreign scholars as well.[104] Every now and then, the Kings of Kashmir invited scholars from outside. They provided them with all facilities, built separate houses for them,[105] and made permanent endowments of lands and Agraharas for their maintenance. Some were offered the high position of premiership of the State. Cankuna, the Tukhara, was the prime minister of king Lalitaditya. The kings received illustrious scholars into their country with honours which even kings would envy.[106] The reception that was offered to Hiuen Tsiang illustrates the point. His biographer tells us that when the king of Kashmir heard of the Master of the Law approaching the borders of his kingdom, he sent his mother and brother with chariots and horses to escort him. Coming nearer to the capital the king himself " with his assembled ministers and all the priests belonging to the capital, advanced to the preaching hall and escorted him onwards, being altogether like a thousand men with standards and parasols, with incense and flowers filling the roads ".[107] After offering the scholar such a royal reception, the king placed at his disposal the services of twenty scribes to facilitate the copying of Buddhist works.[108]

The extension of patronage to foreign scholars meant providing better scholarly atmosphere and guidance for the students of the country. The greater the number of scholars, teachers and experts, the better the quality of education that the people would receive. This produced far-reaching effects upon Kashmirians. It meant not only efficient guidance, but also a constant inflow of newer ideas and ideals. It helped the people to acquire deep learning, to cultivate breadth of vision and to banish pettiness in thought and action.

8. *Extent of Education in Ancient Kashmir* It is almost impossible to know accurately the extent of education in ancient Kashmir, owing to the paucity of informative material on the point. And one is driven to base one's conclusions either on incidental notices here and there, or on certain broad features characterising a particular period. Obviously, the conclusions thus arrived at cannot claim that finality which arises only from an examination of ample reliable and relevant data.

From very early times Kashmir is known as *Saradapitha* or the abode of Saraswati, the Goddess of Learning. Almost all the Kashmirian writers refer to it as *Saradapitha*. Kalhana talks of the high houses of learning even from the very first chapter of his work. Bilhana remembers his homeland as the home of poetry. And so do other writers.

---

103. *Ibid.*, VIII, 3354.
104. *Ibid.*, V, 87.
105. *Ibid.*, VI, 304 ; VI, 87.
106. (*a*) Smith : *Early History of India*, p. 386.
(*b*) Beal : *Life*, pp. 68, 69.
107. *Ibid.*, p. 168.
108. *Ibid.*, pp. 68, 69.

Kalhana, in his Rajatarangini, devotes much time and energy to record the keen interest that the Kashmirian society took in promoting the cause of learning. We find kings, nobles and even ordinary men and women, helping the cause of education by founding Mathas and Viharas, by endowing Agraharas for their maintenance, by building hostels for students and by patronising men of letters. A persistent and consciously directed effort like the one shown by the Kashmirian society to advance the cause of learning, must have proved very stimulating to the common man in his efforts to learn the three R's and to the scholar in his efforts to acquire, assimilate and enrich the existing stock of learning.

Primary or elementary education appears to have been systematically imparted to children in Kashmir after the introduction of Buddhism. The medium of instruction in primary schools must have been the spoken language of the country. This premise is warranted by the discovery of Brami syllabary and Kharoshthi script in the various parts of the country.[109] The former has been ascribed to a period anterior to the third century A.D. and the latter to the sixth century A.D.[110] This was the period when Buddhism was introduced and was flourishing well. Buddhism, it is well known, actively encouraged the language of the people.

During the ninth and the tenth centuries when Kashmir Saivism was in a flourishing state and educational activity was once again intense, elementary education appears to have been imparted again through the language of the people, as testified by Bilhana and Kalhana. The former, while boasting of the educational attainments of his countrymen, tells us that even women of his own times could write and read Sanskrit as well as Prakrit which was the spoken language of the time.[111] Kalhana has more than one reference to show that the language of the common man and woman was the language used in government offices also.[112]

Higher education during the Buddhist times was imparted at the Viharas. When, however, Buddhism was widespread and the Buddhists tried to impart education to the masses, they might have set up other agencies as well ; but reliable information on the point is not available. For the Saivite period, however, living tradition has valuable information to give. During this period evolved an ingenious system which has been described earlier. Each family had its own guru upon whom devolved the responsibility of teaching children of the household. The profession of teaching was hereditary and so were the clients of the guru. No family could change him. The teacher was responsible for the education of a child and the child's parent responsible for the maintenance of the teacher. Students from villages usually stayed at the house of

109. Mr. G. R. Hunter in his *The Script of Harappa and Mohenjodaro* tells us that Brami is not a script. He calls it syllabary. We have therefore adopted the word accordingly. (Hunter : *The Script of Harappa,* p. 44.)

110. Kak : *Antiquities of Basoli and Ramnagar,* p. 29.

111. Buhler : *Vikramankadevacarita,* XVIII, p. 6.

112. Pandit : *Rajatarangini,* V, 206, 398.

their teacher. This remarkably simple system promised education to all, though it is not known how far it expended in actual practice.

The earliest reliable information about literacy in ancient Kashmir is furnished by the tiles excavated at Harwan. These tiles reveal to us that education by the sixth century had become almost universal. The archaeologist who discovered and interpreted these tiles is clear on this point. He says

"That these tiles occupied exactly the same position they were laid by the ancient workman is borne by the fact that each of them bears a number in Karashthi script, the order of the tiles in a series being in strict accordance with their consecutive numerical order. The potter who made the tiles and stamped them with decorative figures numbered them before baking to prevent the comparatively unskilled labourer from making mistakes. Incidentally, it shows that in ancient India over fifteen centuries ago, labourers were expected to know at least the rudiments of reading and writing." [113]

This important finding of the archaeologist which is identical with that of Professor Altekar [114] is significant in so far as it indicates a minimum measure of educational spread in the different parts of India.

Kalhana tells us the life story of the Kashmirian engineer Suyya, who lived during the reign of Avantivarman (857-884 A.D.). This is of considerable importance in so far as it shows the extent to which the educational system of the Kashmirians of that age was successful. The story runs :

"Once upon a time a Chandala woman, named Suyya, while sweeping the dust heap on the street found a new earthen pot with a lid.

In it she saw on raising the lid that a baby with eyes like lotus petals was lying in the middle sucking its own fingers.

With the name Suyya, he grew up an intelligent man, learned in letters, and became in the house of a householder a tutor for children." [115]

Whatever the story of Suyya's birth, he appears to have been a boy placed in poor circumstances. The fact that this boy brought up in the house of a poor Chandala received education is a fact of outstanding importance to us. It shows that the system of education evolved by the Kashmirians of his age was such as would not allow even a boy living in a Chandala house to go without education. Incidentally, the life and education of this boy throws light on many other points also. We come to know that birth was no barrier against education. We also come to know that teaching was not the monopoly of the high caste Brahmins ; even a humble Chandala boy could learn and teach.

We do not possess such reliable and definite information from the eleventh century onwards. But we know that intense educational activity characterised the eleventh and the twelfth centuries also. Some of the greatest Kashmirian writers flourished during this period. Besides,

---

113. Kak : *Guide to Ancient Monuments of Kashmir*, p. 109.
114. Altekar : *Education in Ancient India*, p. 213.
115. Pandit : *Rajatarangini*, V, 74, 75, 78.

scholars from the plains and specially from the Punjab came to reside in Kashmir after the Muslim conquest of these countries. The presence of these scholars also must have influenced the cause of education. Alberuni has his reliable testimony to support this statement. He says, "This town (Varnasi) and Kashmir are the high schools of Hindu sciences." [116] Since there appears to have been no deterioration in the general atmosphere of learning we may well assume that elementary education continued to flourish during these centuries also. After the twelfth, however, there was a fall.

Highly interesting is the fact that the Kashmirians took care not only of their normal boys and girls, but also of the physically defective like the blind. An *institution for the blind* was built as early as the year 1026 A.D. by Utpala, a minister of King Ananta.[117] In these and other matters Kashmir then gave the lead in the field of education.

No definite information is available with regard to the *education of women* in Kashmir. All authorities are silent on the point. This is particularly so about the Buddhist period. One wonders if Buddhist educational movement which made the education of males almost universal and which gave a new lease of life to them passed on without influencing the female section of the society. But since no data is available it is not safe to hazard any conclusions. During the Saivite period, however, we have some definite information on the subject to rely upon. Bilhana, paying a tribute to his countrymen says that the women of his country could speak and write two languages—Prakrit and Sanskrit.[118] This shows that education was imparted to women during this period. It also shows that some women were well educated and could read and write two languages. Of course, the information is not enough to help us to know the extent of their education. Higher education, it looks, was not deemed necessary for all women and that the cultivation of other homely arts and crafts was considered more important. In the *Rajatarangini* women figure largely and are seen taking an active part in the various fields of social life. They help the cause of education by building new Mathas and Viharas or by repairing older ones. In politics and State administration they are ready to meet an emergency and this they do successfully.[119] We find some taking an active part in removing maladministration in the State; some acting as guardians, some others assuming the title of kingship, and some coming out to the battle-field to fight the enemy. Didda, Suganda Devi, Kota Devi, Silla may be mentioned in this connection.[120]

In the cultivation of arts and crafts like music and dance, women in Kashmir took a very active part. The art of dance appears to have

116. Sachau: *Alberuni's India*, p. 173. (Varnasi is sometimes identified with Benares.)
117. Pandit: *Rajatarangini*, VII, 149.
118. *Vikramankdevacarita*, XVIII, 6.
119. (It is significant that one of the first lady ambassadors of the world should hail from the modern descendants of the ancient Kashmirian womanhood—we point to Mrs. Vijaya Lakshmi Pandit.)
120. Pandit: *Rajatarangini*, I, 70; V, 317-18, 243; VI, 332; VII, 535; VIII, 1968.

reached some perfection at their hands. The dancers had learnt to cater to the emotional needs of their spectators and audiences. They would appear at the stage in due apparel and would even make up the face for they knew the art of make-up as early as the fifth century A.D.[121] How this education was imparted is not exactly known. But enough information is available as to the texts and authorities used for the purpose from the famous poem *Kuttinimatam* of Damodhargupta.[122]

9. *Kashmir Teachers Abroad* The part that the Kashmirian teachers played in the spread of Indian culture abroad is admirable and has a message for the modern Kashmirians. We shall briefly notice it here.

The activities of the Kashmirian teachers abroad fall between the fourth and eleventh centuries, which was the flourishing period of Buddhism in Kashmir and which produced some of the greatest and ablest teachers and travellers. Buddhism decayed in Kashmir after the ninth century. This and the rise of Kashmir Saivism marked an ideological change in the country. The new faith did not create that dynamic urge to spread the religion outside which was a distinguishing characteristic of Buddhism. During the tenth and the following centuries, therefore, Kashmir did not produce as many missionaries as the earlier period did. By the twelfth century, the appearance of the Muslims around Kashmir made the task still more difficult. We therefore do not find any great teachers and travellers after this period.

The countries lying to the North and North-West of Kashmir offered wide scope for the Kashmirian teachers. So they went to work in these countries. We get evidence of their presence in this part of Asia from Hiuen Tsiang. On his way to India he had to pass through Kustana (modern Khotan) in Central Asia.[123] There he had found a number of Kashmirian teachers engaged in propagating Buddhist learning. This statement of the Chinese traveller is confirmed by the researches of M. A. Stein in Central Asia. The influence that these teachers had produced on the people of this part of Asia was so deep that it has persisted down to the present day in spite of many changes that have come over the countries.[124]

The first Kashmiri teacher who went to work in China was Khu-Than-San-Kie-Li-pho or *Gautama Sangha Deva.* He entered China in 383 A.D. and translated not less than seven books into Chinese.[125]

One of the greatest of Indian Pandits who worked in China was *Kumarajiva* (fifth century A.D.). His father, a minister of an Indian State, gave up his ministership and became a monk. He went to Koutcha and there eventually married the sister of the king of that place. Soon the couple had a son. When the boy grew up, the parents decided to

---

121. *Ibid.*, III, 382.
122. Damodhargupta: *Kuttinimatam*, V, 82, 876, 75, 77, 124.
123. Beal: *Life*, p. 206.
124. Stein: *Ruins of Ancient Khotan*, pp. 263, 68, 69, 71, etc.
125. Bose: *Indian Teachers in China.*

send him to Kashmir. At the age of nine, Kumarajiva came to Kashmir where he studied under the celebrated Acharya Bhandudatta (Pan-Teon-Ta-Ta). By the time he returned to Koutcha, Kashmirian teachers also had reached it. There he continued his studies under another Kashmirian teacher Vimalaksa. Koutcha in the meantime was invaded by Lo Koong a general of Tsin dynasty. The general took Kumarajiva to China as a hostage and there gave him all facilities to work. A great scholar, he rendered into Chinese as many as hundred Buddhistic Sanskrit books. Though his mother-tongue was neither Sanskrit nor Chinese, he gained an extraordinary command over both. His Chinese translations are highly appreciated even now. His style is more charming than that of the well-known Chinese scholar-traveller, Hiuen Tsiang. Even today, one of the commonest of questions put to boys in schools and colleges in China and Japan is to ask whether they like Kumarajiva or Hiuen Tsiang, the expected up-to-the-mark answer being the one in favour of Kumarajiva. Professor Sylvan Levi, as quoted by the author of *Indian Teachers in China*, honours him as " the greatest perhaps of all translators who preached in China the genius and work of Indian Buddhism ".[126] He was a successful preacher and attracted a large following among the Chinese Buddhists. It is said that he commanded the respect of no less than one thousand Buddhist disciples—the most notable of them being Fa Hiuen (401-410 A.D.).

The next notable Pandit from Kashmir was *Vimalaksha* (fifth century A.D.), Kumarajiva's teacher at Koutcha. Vimalaksha was warmly received by his pupil. The teacher and the pupil began to work together. But the strain of hard labour told badly upon the pupil's life and unfortunately he died shortly after his master's arrival, obviously at a very young age. The teacher, therefore, had to continue the work started by his pupil. He translated two works. The third monk was *Punyatrato*. Next came *Buddhayasas* who translated four books. He was followed by *Dharamayasas* who translated two. *Buddhajiva* came next. He was followed by *Dharma Mitra*. Six of his works are known at present. They all flourished during the fifth century A.D.

After this band of able teachers, Kashmir sent the greatest of all her missionaries to the Celestial Empire, the famous *Gunavarman* (fifth century A.D.). Fortunately the particulars about this monk have been collected and published by the great Sinologist, M. Ed. Chavannes in the T'oung, Pao of May 1904.

Gunavarman was descended from the royal family of Kashmir. He was well educated in the Buddhist lore and intensely interested in learning and its diffusion. He was averse to wordly pleasures; had no desire to wear the royal crown ; and so he refused it when it was offered to him by the ministers of the State on the death of the king. He then took up a beggar's bowl and started on his errand to disseminate Buddhist learning. Traversing the plains and mountains of India, he entered the kingdom of Ceylon (Sinhala) and propagated the *Dhamma* of the

---

126. Bose : *Indian Teachers in China.*

Lord there. Satisfied with his success in Ceylon, he went to Cho-Po, now known as Java, which, as noticed by the Chinese traveller Fa Hien (on his way back to China) was a flourishing place for Hinduism. Gunavarman, therefore, had enough work to do. He was a successful preacher and very soon he succeeded in spreading the *Dhamma* in Java also. The news of his success made him famous all-round. The Wen emperor of China heard about him. He sent a few Chinese *Sramanas* to bring Gunavarman over to his country. But when the Chinese *Sramanas* reached Java, this 'fast-footed pedestrian' as Alberuni calls the Kashmiri, had already started for China in a merchant boat. In China he was received with honours everywhere, and had to stay at many places before he reached his host. On reaching Kien-Yu (Nanking) he was offered a royal reception by the Wen emperor. Gunavarman soon started his work. His predecessors had supplied the Chinese with enough of Buddhist knowledge. The need of the hour now was to systematize and canalize the knowledge imparted so far, and to supply the lacunae, if any. He studied these problems properly and found that due attention was not paid to the uplift of women. They were not allowed a position of equality with men. They were not allowed to enter the Order, become nuns or receive education. He fought against these restrictions. He organised nunneries, allowed women to enter the Order and enjoy the benefits of equality of status. Gunavarman could not return to Kashmir. He died in China serving the cause so dear to him.

The next Kashmirian teacher in China was *Ratnacinta.* He translated seven works and died in China at the ripe old age of hundred. *Tein-Si-Tsue*, another great monk worked for twenty years and translated eighteen works. A posthumous title of *Hevi-Pien-Fa-Shi* was conferred on him as a mark of respect for his learning by the Chinese Emperor. The last of the Kashmirian monks in China was *Mou-L-Chi-Ki.* He flourished in 1005 A.D. Henceforth we hear of no more Kashmirian monks going out. This was, as stated in the beginning of this chapter, due to the decay of Buddhism in Kashmir, the rise of Kashmir Saivism and the appearance of Muslims around Kashmir.

The author of *The Indian Teacher in China* gives us the names of 62 Indian teachers. Of these a dozen are Kashmirians. This is admittedly an impressive contribution when we take into consideration the immense size of the sub-continent of India and compare it to the small size of the valley of Kashmir.

The Buddhist monuments in Cambodia and Java, have revealed that there exists a considerable amount of Kashmirian influence in their arts of sculpture and painting. Havell tells us that a band of spirited artists started from Kashmir and travelling from one place to another, eventually settled in Cambodia carrying with them the arts they had mastered in their homeland.[127]

---

127. Havell: *Indian Sculpture and Painting*, p. 136.

Buddhism spread in Tibet as late as 640 A.D. The first great ruler of Tibet was Srong-btsan-sgam-Po (667 A.D.). Tibet was not a civilized country then and had no literature of its own. The art of writing was unknown. To set the country on the path of progress, it was essential to introduce the art of writing. So the king " sent his minister Thou-mi, the son of Ann, with sixteen others to India for the study of the alphabet. After his return Thou-mi devised the Tibetian character on the model of the contemporary Kashmirian alphabet ".[128] The king then engaged scholars for translating Buddhist scriptures into Tibetan. The scholars employed in the task included men from China, India and Kashmir—Tuna being the translator from Kashmir. During the reign of the next great king Khri-Srong-Ide-Btsan, two more Chinese monks Me and Po, and the Kashmirian Ananta were employed for the purpose.

Thou-Mi Shama Bhata, the great scholar and teacher mentioned above was a minister of the great Tibetan King Srong-Btsan-Sgam Po.[129] He impressed the Tibetans so well that " even to the present day the people there express their gratitude to Kashmir for having sent this apostle of learning to them, and they worship his image pronouncing his name as Thum Sambhota ".[130]

10. *Progress of Various Academic Subjects in Kashmir*: We shall now briefly indicate the progress of different branches of ancient learning in Kashmir.

(a) *Sahitya Sastra* (*Poetics*) Sanskrit poetics seems to have been one of the main subjects of study and research of the Kashmirian authors. There is not a single system of importance that has not been evolved, discussed or criticised by some one or the other of Kashmirian writers. It is significant that the Sastra continued to be original and creative in character only so long as the Kashmirian scholars contributed to it. The scholarship and versatality with which they handled the Sastra has never yet been rivalled. As Professor Sushil Kumar De observes :

" This activity, in its early stage, centres round Kashmir to which place belong most of the famous writers on poetics. We do not indeed know the place of origin of the two earliest writers Bharata and Bhamaha, but immediately after them we find Vamana, Udbhatta, Rudrata, Mukula, Anandvardhana, Lollata, Bhatta Nayaka, Abhinavagupta, Ksemendra, Kuntala, Mummata, Ruyyaka, flourishing in Kashmir. The only important exception is found in Dandiṇ, who was probably a South Indian writer. Coming to the later times we find the study extending itself to Central India, Guzarat, the Dekkan, and even Bengal. In South India, no doubt this study was kept alive by a succession of brilliant, if not very original writers ; but these contributions of later times though greater in bulk and sometimes superior in a certain acuteness, never supersede the volume of original work done in Kashmir, which may fittingly be regarded as the home-land, if not the birthplace of the Alankara-sastra. Th writers of Central India, Guzarat, the Dekkan and Bengal

128. Kaul A : *The Kashmiri Pandit*, pp. 20, 30.
129. (*a*) Smith : *Early History of India*, p. 375 ff.
(*b*) Paul Masson-Oursel : *Ancient India and Indian Civilization*, p. 206.
130. Kaul A. : *The Kashmiri Pandit*, pp. 29, 30.

carry on the tradition as well as acknowledge the authority of the Kashmirian originators of the Science." [131]

The development of poetics manifested itself in the creation of more than one school of literary criticism which we may briefly notice below with special reference to Kashmirian contribution : —

(i) *The Alankara System* This system had its first independent discipline at the hands of Bhamaha, the author of *Kavyalankara Sutra.* According to this Acarya, Alankara is the essence of poetry, that is to say, Bhamaha and his school associated the essence of poetry with the outward embellishments. Under this school, *Udbhatta* (779-813 A.D.) is the first writer of importance from Kashmir. He elaborated Bhamaha's work by writing a commentary *Bhamaha-Vivarana* or *Kavyalankara Vivriti* which is now lost. His second work *Alankara-Sangraha* consists of collections of verses defining forty-one figures. He has so ably expounded the system that to later writers it is not Bhamaha but Udbhatta who is the authoritative exponent of this system. "He is the foremost representative of this school and his name is associated with several doctrines in the Alankara Sastra." [132] Udbhatta was the Sabhapati of king Jayapida of Kashmir. *Rudrata* (884-903 A.D.) is the second writer of importance. He flourished during the reign of Sanker-varman of Kashmir. The distinguishing feature of his work, the *Kavyalankara*, is the detailed treatment of poetic figures. His explanations are ample and concise. The book has been commented upon by such great writers as Vallabhadeva, Namisadhu and Asadhara.

(ii) *The Riti System* : This system laid stress on the objective beauty of representation realised by means of (Riti) diction and its constituent excellencies (gunas).[133] It is a synthesis of the Alankara school of Bhamaha and the Guna school of Dandain. The Kashmirian scholar *Vamana* (779-813 A.D.) is the chief exponent of this system. "It was he who boldly asserted that Riti was the soul of poetry." [134] To him belongs the credit of being the first writer on poetics "who gave us a well-thought-out and carefully outlined scheme of poetics, no longer naive or tentative, which in spite of its theoretic defects is in some respects unique and valuable".[135] Vamana was a minister of King Jayapida of Kashmir and a contemporary of Udbhatta. Kalhana mentions them both as the members of Jayapida's Sabha.[136] A South Indian Prince Gopendra Tippa Bhupala wrote a lucid exposition of Vamana known as *Kamadhenu.*

(iii) *The Rasa System* The exponents of this system believed that poetry did not lie, as Dandin and others had assumed, in the external garb ; but that it lay in the internal content, in feelings and

131. De : *Studies in the History of Sanskrit Poetics*, Vol. I, pp. 328-29.
132. Kane : *Introduction to Sahitya Darpana*, p. xliii.
133. De : *Studies in the History of Sanskrit Literature*, Vol. II, p. 269.
134. Kane : *Introduction to Sahitya Darpana*, p. xlviii.
135. De : *Studies in the History of Sanskrit Literature*, Vol. II, p. 112, 113.
136. Pandit : *Rajatarangini*, IV, 497.

moods.[137] The founder of the Rasa school on the theoretical side was Bharata. He expounded his theory in Sutra form and this was elaborated in four different ways by four great exponents Sri Sankuka, Sri Lollatta,[138] Sri Bhatta Nayaka, and lastly Abhinavagupta—the last being the most authoritative expositor of the doctrine of Rasa. The elaboration of the doctrine led to the next question—how is it to be conveyed. This again ushered into existence three schools—the school of Dhvani, of Vakroti and of Anumana.

The Dhvani Theory lays down that Dhvani (suggestion) is the essence of all poetry and also aims at the correlation of the earlier schools of Alankara, Riti and Rasa to it, thus constructing a complete and comprehensive discipline of poetics. The outlines of this new system were first clearly marked and foundations firmly laid by *Anandavardhana* (855-84 A.D.) who was a member of the Sebha of Avantivarman. His famous work on poetics, the *Dhyanyaloka*, has two parts : the first part is attributed to Dhvanikara and the second part to Anandavardhana himself.[139] Some scholars, however, believe that the author of the *Karikas* is no other than the author of the *vritti* which means that both the parts have been written by Anandavardhana alone.[140] The Dhvani theory of Anandavardhana was so comprehensive and systematic that all the earlier systems of poetics lost their authority in presence of it.

"The labours, therefore, of all later writers, typified by Mammata consisted generally in working out the details of the Dhvani theory and the scheme of poetics standardised on its basis ; and they spent all their scholastic powers in defining and explaining, but hardly in adding anything of abiding interest. No other work on Sanskrit poetics has indeed exerted so much influence as the Dhvanyaloka, which brought to a focus the tentative efforts of earlier thinkers and by its thoroughness and masterly exposition eclipsed all its predecessors, dominating as it did, the thoughts of generations of theorists even down to the present time." [141]

Abhinavagupta (tenth and eleventh centuries A.D.) The most authoritative exponent of the Dhvani theory is Abhinavagupta. He does not come forward with a new theory of poetics, but interprets and explains Anandavardhana. His erudition and influence, however, contributed a good deal towards finalising the Dhvani theory as the most standard theory of Sanskrit poetics. The Dhvanikara and Locanakara together form perhaps the last word in the field of Indian literary criticism. Abhinavagupta was the son of Kashmirika Cukhala and the grandson of Varahagupta. He had a brother whose name was Manorathagupta. Abhinava flourished by the end of the tenth and the beginning of the eleventh centuries. His fame rests chiefly on his philosophical works on Kashmir Saivism. But he was a versatile writer

137. (a) Kane : *Introduction to Sahitya Darpana*, p. cxlvii.
(b) De : *Studies in the History of Sanskrit Poetics*, Vol. II, p. 269.
138. Lollatta and Sankuka were the contemporaries of Udbhatta. Sankuka is known to Kalhana also. He lived under Ajitpida (816 A.D.).
139. Kane : *Introduction to Sahitya Darpana*, pp. lviii-lxiv.
140. *Vide* A Sankaran : *Some Aspects of Literary Criticism in Sanskrit.*
141. De : *History of Sanskrit Poetics*, Vol. II, p. 223.

and wrote on many branches of Indian learning including poetics and dramaturgy. His remarkable exposition and brilliant advocacy of these two theories in his *Abhinavabharati* established for him an authority in poetics equal to that of Patanjali and Kumarilabhatta in the sphere of Vayakarana and Mimansa. He is said to have written one more commentary called *Kavya-Kautuka*, on the work of one of his teachers (Bhatta Tauta).

Mammata (eleventh and twelfth centuries A.D.) was the ablest summariser of the various theories of poetics. His book *Kavya-Prakasa* is very popular and is the standard text-book on the subject. "There is hardly any other technical work in Sanskrit which has been so much commented upon as the *Kavya-Prakasa* and no less than fifty different glosses will be found notified in the various reports, catalogues and journals relating to Sanskrit manuscripts.[142] The popularity of the work is not due to any of the original theories expounded therein, for there is very little originality in work, but to the able manner in which the different theories are brought together, their interpretation defined and each of them assigned to its proper place among the sources of literary appeal." [143] Mammata flourished in Kashmir between the middle of the eleventh and the first quarter of the twelfth centuries. He was a son of Jayyata. Kaiyyata the famous grammarian was his brother. Mammata is chiefly known for his *Kavya-Prakasa*. He, however, is the author of a lesser known work the *Sabdavyapara-Paricaya*.also.

Ruyyaka (eleventh century A.D.) is one of the most important writers following Mammata. He shows a remarkable degree of insight and independence of judgment. The importance of his work *Alankara-sarvasva* lies in the fact that he complemented certain aspects of the Alankara and Dhvani doctrines. He is recognised as a great authority by later writers. His works are numerous though only a few have yet been printed. The author of *Studies in the History of Sanskrit Poetics* gives us a list of ten works. Many writers such as Alaka, Jayaratha, Samudrabandha, Viduacakravartin commented upon Ruyyaka's works.

Bhatta Nayaka (855-84 A.D.) Although Anandavardhana's theory of Dhvani was accepted by most of the later writers, Bhatta Nayaka did not accept it and set forth his views in *Hrdaya-Darpana*. That Bhatta Nayaka was a very influential writer can be deduced from the fact that even Abhinavagupta has to refute his arguments to establish the theory of Dhvani. He flourished during the reign of King Avantivarman.

Kuntala (tenth and eleventh centuries A.D.) strives to put forth his own system after Bhamaha's theory of Vakroti, but includes in it all ideas of Dhvani and Rasa. His work *Vakroti-Jivita* has now been recovered and published.

Mahimabhatta (eleventh and twelfth centuries A.D.) was a scholar of extraordinary attainments and remarkable force of expression. In

---

142. De : *Studies in the History of Sanskrit Poetics*, Vol. I, p. 169.
143. Sankaran *Some Aspects of Literary Criticism*, p. 148.

his *Vyakti-Viveka* he demolishes the Dhvani theory of Anandvardhana. He examines in detail the definition of Dhvani, corrects the mistakes and then argues that it is Anumana. Mahima brought into his work a width of learning and a logic of argument which is unparalleled. " His work is one of the masterpieces of the Alankara literature. . His work contains brilliant argument, and exhibits great erudition, logical acumen, fastidious criticism and deep learning." [144] Mahima was conscious of his learning. He claims for himself originality of treatment and freedom from slavish imitation and, therefore, references to his predecessors are very scanty in his work. He flourished in Kashmir between the eleventh and the twelfth centuries A.D. He was the son of Sridhairya and a pupil of Syamala.

The Kashmirian authors discussed above are the most important original writers on the science of poetics. In addition to those there is quite a host of smaller writers some of whom are (1) Utpaladeva, the reputed author of the philosophic work *Isvarapratyabhijna sutra*; (2) Bhatta Tauta, Abhinava's Guru; (3) Ksira, a pupil of Bhattenduraja; (4) Ksemendra, the famous polymath; (5) Ananda Rajanaka, a commentator on Mammata; (6) Rajanaka Ratnakantha, a commentator on Ratnakara; and (7) Jayaratha, the author of *Alankaravimarsmi.*

(b) *Grammar*: Kashmirian scholars claim that the great grammarian, Patanjali, the author of *Mahabhasya*, belonged to Kashmir. He is known to have lived in a village called Gonardiya. Scholars have tried to identify the village Gonardiya with some village of the same name or by ascribing some meaning to the word Gonardiya. For instance, the word is said to mean an eastern country. On such flimsy basis, it is argued that he lived in a village Gonarda situated in the East of India. But Kashmirians assert that he was born in a village called Gudra in Kashmir. The evidences they offer are as inadequate as those offered by other claimants. It may, however, be of interest to note some of these here. Kashmirian scholars believe that the *Mahabhasya* is a typical Kashmirian product; that one can mark Kashmirian vernacularisms in its text; that some of the sounds which are peculiar to the Kashmirian vocal organs have influenced his treatment of the subject; and that he shows much acquaintance with Kashmirian foods. None of the claims about his nativity appear satisfactory; but all the same they cannot be ignored till a thorough investigation is held to discover the home of this great grammarian.

Jayaditya and Vamana: Jayaditya and Vamana are the joint authors of the *Kasika*, the authorship of the first five chapters being attributed to the former and those of the last three to the latter. " The Kasika is a running commentary on Panini's *Astadhayayi* and its merit consists in the lucid manner in which it has explained the Sutras of Panini. Sometimes it gives us information which we could not possibly have obtained from any other source." [145] Jayaditya of the *Kasika* has

144. Kane: *Sahitya Darpana*: Introduction, p. xciii.
145. Belvalkar: *Systems of Sanskrit Grammar*, p. 37.

been identified with Jayapida, the king of Kashmir and Vamana with his minister of the same name.[146]

Kaiyyata : Kaiyyata's *Pradipa* marks the end of the second period in the history of Paninya school. Kaiyyata presents his book in the light of the different schools that had preceded him. Just as Mammata's work presents a consummation of the different systems in the field of Sanskrit poetics, so does Kaiyyata's work in the field of Sanskrit grammar. Kaiyyata was a Kashmiri. His father's name was Jaiyyata. Mahesvara was his guru. Mammata, the famous author of *Kavyaprakasa*, was his brother. He flourished between the eleventh and the twelfth centuries.

Kshirasvamin (eighth century A.D.) The Dhatupatha, as we find it in the Paninya system was commented upon by Kshirasvamin. Kshirasvamin has been identified with the namesake grammarian of the *Rajatarangini*.[147] He was a teacher of Jayapida, the author of the *Kasika*. Some scholars do not accept this identification on the ground that Kshira, Panini's commentator is quoting Bhoja, an author who flourished in about 1050 A.D., whilst our grammarian should have flourished in the eighth century A.D.

In the history of the development of Paninya school, therefore, the contribution of Kashmirians is very significant.

Chandragomin (470-600 A.D.) is the author of *Chandra Vyakarana*. He is not quite an original writer. His attempt at writing a new grammar resulted from " the necessities of the times rather than to any real split in the domains of the science itself ".[148] His really original contribution amounts to thirty-five Sutras. These were later on incorporated into the Kasika by Jayaditya and Vamana. Chandragomin's grammar enjoyed great circulation during the palmy days of Buddhism. This assumption is warranted by the discovery of his grammar in the Tibetian and Ceylonese languages. Chandragomin has been identified with the Chandradeva of the *Rajatarangini* who flourished under Abhimanyu. He is known by the alternative names of Chandragopin or simply Chandra.[149] Much confusion prevails about his age. According to Keith he may be placed between 470 to 600 A.D.[150]

When Indian scholarship began to decline, there arose a demand for the simplification of standard works. The *Katantra school* owes its existence to this demand. In fact the name " Katantra " means a short treatise, a handbook. It is not exactly known when this school entered Kashmir. But some information has been culled out as to the form in which the Kashmirians received it. Belvalkar is of the opinion that the Sutrapatha received in Kashmir was considerably different from the one known to Durgasinha, the most famous commentator on the

146. *Rajatarangini*, IV, 488. Belvalkar : *op. cit.*, p. 35.
147. Belvalkar : *Systems of Sanskrit Grammar*, pp. 51, 52.
148. *Ibid.*, p. 56.
149. Keith : *A History of Sanskrit Literature*, pp. 71, 72.
150. *Ibid.*, p. 432.

Katantra school.[151] The author continues, " we can hence conclude that the Kashmirian Pandits got familiar with the works of Durgasimha much later. Until then they busied themselves with writing original commentaries and digests on the Katantra which, as Dr. Buhler observes, has been the grammar of the Kashmirians from the twelfth to the sixteenth century." [152] Only two authors of this system have come down to us. The one is Bhatta Jagaddhara and the other Chhickhubhatta. The former wrote the *Balabodhini* and the latter the *Laghuvrtti.*

(c) *Lesser Epic Poets* : Kashmir has not produced a Mahakavi ; but it has to its credit several poets who wrote lesser epics. Here we shall notice a few of them.

Mentha : Mentha is the earliest poet of lesser importance from Kashmir. He has been held in high esteem, probably higher than Kalidasa by rhetorecians. He receives the compliment of being placed second in the spiritual lineage of Valmiki, Bhavabhuti, etc. He was attached to the court of *Matrigupta,* himself a poet. Kalhana has recorded that when Mentha presented a poem to Matrigupta, the king was so highly pleased that he offered him a reward of a gold dish, which the poet refused to accept.[153]

Sivasuamin His most famous work is the *Kapphinabhudaya* or exhaltation of king Kapphina. It describes the expedition of king Kapphina against the country of the king Prasenajit of Sravasti. An edition of the text has been brought out by Professor Gauri Shanker of the Lahore University. " In the use of language," says the learned editor, " Sivaswamin is by no means less important than Magha and Ratnakara. The richness of his vocabulary marks him out to be a literary artist of great eminence who experimented with new material and made use of the choicest and rarest forms of expression." [154] Sivaswamin was the son of Battacaryasvamin. He was one of the court poets of Avantivarman of Kashmir (855-84 A.D.). Many more books are attributed to him, though none except the one mentioned above has come down to the present times.

Ratnakara is the author of the *Haravijaya.* It is a long poem describing tales about God Siva. The poem has been discussed at length by G. Buhler in his *Report on Search of Manuscripts.*[155] To him, Ratnakara, in spite of his greatness, is a tiresome poet. But to the Indian poets and scholars he is a poet of vast learning and imagery.[156] His work has been commented upon by Vallabhadeva and Alaka, both Kashmirians. He is also the author of the two more works—*Vakroti-Pancasika* and *Dhvanigadhapancika.* Ratnakara was the son of Amrta-bhana. He flourished during the reign of Jayapida (755-85 A.D.).

151. Belvalkar : *Systems of Sanskrit Literature,* p. 91.
152. *Ibid.,* p. 91.
153. *Rajatarangini,* III, 261.
154. Gaurishanker : *Kapphina* : Preface, p. 5.
155. Buhler : *Report,* p. 42.
156. Krishnammacharyar : *A History of Sanskrit Literature,* p. 160.

Abhinanda: Abhinanda wrote his *Kadambari-Kathasara* summarising Bana's Kadambari. His poetry has been held in high estimation by rhetoricians. Abhinanda was the son of Jayanta. His ancestors are said to have come to live in Kashmir from Gauda, i.e. Bengal. One of his ancestors, Saktisvamin was a minister under king Lalitaditya of Kashmir. Abhinanda must have flourished during the tenth century A.D.

Bilhana: Bilhana's *Vikramankdeva-carita* is a poem in eighteen chapters describing the glory of king Vikramaditya of Kalyan. The poem was first discovered and edited by G. Buhler. The main theme of this laudatory poem is royal wars and royal marriages. The poet after giving some account of the Chalukya race dwells at length upon the exploits of Vikramaditya and those of his father. The poem is important from a historical point of view also. Bilhana, in narrating the history of his patron does not give us a fantastic account of his patron as is wont with an average Sanskrit poet. " Bilhana was born at Khonamukha (modern Khonamoh) three miles from Pravarapura, modern Srinagar, in a family of Madhyadesa Brahmins. His father Jyestha Kalasa was a grammarian who wrote a commentary on the *Mahabhasya*. His mother was Nagadevi." [157] Bilhana was a contemporary of king Ananta of Kashmir (1084-1101 A.D.). He had two brothers who were both scholars and poets. Bilhana received his education in Kashmir. He studied the Vedas, grammar and poetics. After finishing his education he left his home and travelled in India. Whilst on his tour he visited Mathura, Kanouj, Prayag, Benares, Bundelkhand, Somnath and Rameswara. Thence he proceeded to the court of Kalyan, where Vikramaditya II was well impressed by his scholarship and poetic merits. He installed him to the high position of Vidyapati and patronised him generously.

Ksemendra Kashmir, again in the eleventh century, produced a writer of the most unflinching industry and often dreariness, the polymath Ksemendra. In 1037 he wrote his *Bharatmanjari*, in 1066 a *Dacavataracarita* in which each of the ten incarnations of Vishnu is described, the ninth being the Buddha thus definitely adopting him into the Hindu Pantheon. Of early date no doubt is his *Ramayanamanjari* an epitome of the epic, which like that of Bharat is correct and important for the history of the text but poetically worthless. He turned the *Kadambari* also into verse in the *Padya-Kadambari*." [158] Ksemendra was the son of Prakasendra. His father was a great patron of the learned and was, therefore, called Indra. Ksemendra had the privilege of being a pupil of Shree Abhinaguptapadacarya, the revered Kashmirian philosopher and sage. He was a contemporary of king Ananta of Kashmir (1029-64 A.D.).

Mankha: The *Srikanthacarita* of Mankha is a long poem which describes in twenty-five cantos the destruction of three cities by Siva. Many of the verses have a double meaning. But the poet lacks lucidity

157. Buhler: *Vikramankadevacarita*: Introduction, p. 7.
158. Keith: *A History of Sanskrit Literature*, p. 135, 136.

of expression. The last canto describes a Sabha met to consider the poem of the author. The canto shows the character of such scholarly associations of those days. It also records the names of many poets, grammarians, physicians, etc. who attended the meeting. Mankha has written a Sanskrit dictionary known as *Manka Kosa.* Some other works have been attrributed to him. He was the son of Visvavartha. He had two brothers. They were all in the employ of king Jayasimha of Kashmir. Ruyyaka was his preceptor.

Sambhu : Sambhu was a contemporary of king Harsa (1073-1101 A.D.) of Kashmir. Vallabhadeva quotes some of his verses in his anthology. *Rajendrakarupura* is an eulogy of king Harsa the poet's patron.

Jalhana : Jalhana wrote *Somapalavilasa* in honour of king Somapala of Rajpuri, modern Rajuri. The poem has been commented upon by Rajanaka Rucaka. *Mugdhopadesa* is another of his works.

Jayadratha : *Haracaritacintamani* is an important poem of Jayadratha. The poem relates in thirty-two cantos as many legends connected with Siva and his various Avataras. Eight of these are localised at well-known Kashmirian Tirthas. The poem is useful in understanding Siva practices and beliefs and in locating and identifying the old Tirthas of Kashmir. The book proved very useful to M. A. Stein in identifying the historical places mentioned by Kalhana in his work. *Atankarvimarsini* and *Alankararoda-harana* are two more of his works on poetics. Rajanaka Jayadratha was the son of Srngararatha and brother of Jayaratha. He studied under Subhatadatta and Sankhadeva. He flourished at the beginning of the thirteenth century A.D.

Bhanumaka : Bhanumaka is also styled Bhima-Bhuma. He is the author of a *Ravanarjuniya* or *Arjunaravaniya.* " The epic in twenty-seven cantos tells the tale, found in the Ramayana, of the strife between Arjuna Kartavirya and Ravana." [159] The poet won fame in Kashmir. He flourished in the ninth century.

(d) *Gnomic and Diadactic Poetry* In this branch also Kashmir has her representative writers.

Damodhargupta : The earliest diadactic poet from Kashmir is Damodharagupta. He is the celebrated author of the unique book the *Kuttinimata.* The work is an interesting treatise on Indian pornography. The book teaches a young girl to win for herself gold and lovers by the use of all the arts of flattery and feigned love. The poet has used the most impressive language in describing the different aspects of the story. " India has never shirked," writes the learned editor of the book, Mr. Tansukhram Mansukhram, " from making an unbiased study of her social life. Treatises on the science of love and pornology were freely written. An impassioned record of such work furnishes material for the study of social virtues, vices, habits and customs of a people. From this point of view, therefore, the poem of Damodharagupta is an important document for the social life of Kashmir in particular and India

159. Keith : *A History of Sanskrit Literature*, p. 133.

in general."[160] The chief aim of the poem is to draw a vivid picture of the ills of the society with a view to carrying out sweeping reforms. The poet himself remarks, " whosoever reads this poem carefully and follows the implied advice therein, will not be liable to be cheated by rogues, wicked women and deceitful procuresses ".[161] Damodharagupta was the chief court poet of Jayapida of Kashmir (751 A.D.).

Bhallata : Bhallata is the next diadactic poet from Kashmir. His *Sataka* is a hard, but pleasant poem on morals. Bhallata also wrote a good deal of other poetry to judge from citations in the anthologes.[162] Bhallata flourished under king Sankaravarman of Kashmir (884 A.D.).

Silhana Silhana's work *Santisataka* is not very original. It is believed that Bilhana wrote the book in Bengal.[163] His date is uncertain.

Ksemendra : His *Samayamatrka* is written on the model of Damodharagupta's *Kuttinimata.* " Another of Ksemendra's numerous writings is the *Kalavilasa* which in ten sections discourses of the various occupations and follies of mankind. The hero of the book is the famous Muladeva, the personification of all trickery, who consents to educate in his own trade the young Chandragupta whom his father entrusts to his care. We learn from him of the spirit of cheating, Dambha which has descended to earth and reigns among ascetics, doctors, etc. There is in certain respects a curious modernity in Ksemendra's pictures ; he knew wandering singers, and bards who went about gipsy-like, with pots and carts, wearing their hair long, rich in children, winning many gifts by flattery and wasting by mid-day what they had received in the morning. But we are back to modernity when we find that the doctor, who has quack medicines and who has killed many a patient, is at last voted a great success and cuts a splendid figure. The *Darpadalana*, in seven sections, is intended to show the folly of pride whether it be based on noble birth, wealth, knowledge, beauty, courage, generosity or asceticism. The *Sevyasevakopedaca* in sixty-one stanzas is a little text of advice regarding servants and their masters, the *Caturvargasamgraha* describes the four ends of life, morality, practical life love, and release. The *Carucaryacataka* is a century of verses laying down the rules of good behaviour ".[164]

Cambhu Cambhu wrote under Harsa of Kashmir (1089-1101 A.D.), the *Anyoktimuktalatacataka* in 108 elaborate stanzas of no special merits. His *Rajendrakarnapura*, an eulogy of Harsa, is cited by Vallabhadeva.

(e) *Religious Poetry* : Some of the Kashmirian authors in this field are noted below : —

---

160. Telang : *Kuttinimata* : Introduction, p. 3.
161. *Ibid.*, p. 5.
162. Keith : *History of Sanskrit Literature*, pp. 231-32.
163. *Ibid.*, p. 231.
164. *Ibid.*, p. 239.

Sarvajnamitra (eighth century A.D.) is the earliest religious poet from Kashmir. His poem *Sragdharastotra* is a poem written in honour of Tara, the Buddhist prototype of the Hindu Goddess Kali.[165]

Ratnakara : The next poet of importance is Ratnakara. He is the author of *Vakroktipancacika.* Ratnakara offers this poem to Lord Siva, indulging in most complex refinements. " His epic gives no ground to doubt the sincerity of his devotion to Siva." [166]

Anandavardhana : The *Devicataka* of Anandavardhana is written in praise of Devi in one hundred elaborate stanzas.

Utpaladeva The *Stotravali* of Utpaladeva consists of a series of twenty short hymns in honour of God Siva. Utpaladeva is more famous for his works on Kashmir Saivism. He flourished during the tenth century A.D.

(f) *Dramaturgy* The Kashmirians who contributed to this field are noted below : —

Matrgupta Matrgupta, a king of Kashmir, though not a Kashmiri by birth, is the earliest known commentator on Bharata. His opinions on natya, alankara and sangita are quoted profusely by Abhinavagupta, Kuntaka, etc.

Udbhatta Udbhatta is mentioned by Sarangadeva as a commentator on the *Natyasastra* next in rank only to Lollata. His commentary is not available now, nor that of Lollata.

Abhinavagupta His *Abhinavabharati* is the most important commentary on Bharata. Abhinava criticised the views of all important writers on Bharata such as Sriharsa, Rahulaka Sankuka, Bhatta Nayaka, Lollatta and others. Under the sublime teachings of his master Bhatta Tauta, he purged the *Natyasastra* of *Gita* and *Nrtya* (music and dance) which these latter scholars had thrust into it and thus made the work " based upon the principles of rasa ".[167] The Baroda Oriental Research Institute has published a scholarly edition of this work. Two volumes are already out and two more are under preparation.

Sarangadeva Sarangadeva is not a writer on dramaturgy but on the allied art, *Sangita.* Sarangadeva was a Kashmirian. Having finished his study at home he started to seek his living in India. After visiting various places he reached the Deccan and became the court poet of the ruler of Daulatabad, about the beginning of the fourteenth century A.D. Sarangadeva was well versed in the Northern (or rather the Aryan) type of art. Now he was in the Deccan and the Deccan represented the Dravidian type. With the true genius of a great man he studied the Deccan school of song and dance and mastered it well. In him the two schools synthesized. He gave expression to his new ideas in his *Sangitaratnakara.* This book marked a definite stage in the development of the

---

165. Nariman : *Literary History of Sanskrit Buddhism,* p. 188.
166. Keith : *A History of Sanskrit Literature,* p. 216.
167. Dr. B. Battacharyya : *Natyasastra,* Vol. II, Introduction, p. ix.

art of music. "Following Bharata, Sarangadeva, who won for himself the title of Nihsankha (he who has no doubts on the subject he treats of) was the first to make a happy combination of Aryan and Dravidian modes, and in his hands *Nrtana* (dance) receives the fullest and most comprehensive treatment."[168] The laws laid down in the sangita command the same authority over the musicians as the laws of Manu command over the Hindus. Hence it is known as the veritable Manu-Smriti of Music. M. Krishnamachariar gives a different account of his exit from Kashmir. He says that Sarangadeva's grandfather came out from Kashmir and settled in Daulatabad. Soddhala, Sarangadeva's father, took up service in the court of the king. Sarangadeva was also installed to the high post of the auditor-general in the kingdom.[169] This point evidently needs clarification at the hands of Sanskritists and master-musicians. India has not produced many writers on dramaturgy. Bharata and Sarangadeva are the highest authorities and of these the latter is a Kashmirian.

(g) *Drama*: Drama and stage were popular institutions of the society in ancient Kashmir. The dramatic and stage arts had in consequence developed well. The Indian drama, it is usually said, was meant more for the reader than the spectator.[170] Whatever the truth of this statement for India, it is not at all true of Kashmir. "It is certain," says Keith, "that in the eleventh century in Kashmir they were not uncommon."[171] And, let it be stated that they were not uncommon earlier too. The *Kuttinimata* of Damodargupta gives an idea of the popularity of such representations. In fact it gives a description of an actual representation of the *Ratnavali* of Sri Harsa,[172] and Damodhargupta lived as early as 751 A.D. We know that the stage continued to enjoy its popularity during the ninth century also, for we find Sura, the prime minister of Avantivarman, staging the drama in 860 A.D. And the frequency with which dramatic representations were held during the centuries following the ninth is, of course, well known. During this time even kings used to take keen personal interest in it.

The greatness of Kalidasa has tempted many a province of India to claim him as its own and Kashmir is no exception. It, however, claims a special hearing. A few years back, Professor Lachmi Narayan Kalla of the Agra University fixed Kashmir as the home of the poet. Scholarly opinion has come to favour this thesis. Professor Keith observes, "Much more ingenious is an effort to fix his home in Kashmir and to trace in his poetry an adumbration of Pratyabhijina Castra of that land with its doctrine of recognition of the unity of the divine love".[173] By the birthplace of Kalidasa, the writer means, not only the place where the poet was born, but a place where he received his education and developed his character, cultivated the traditions and customs of a society

168. *Ramakrishna Centenary*, p. 569.
169. M. Krishnamachariar: *A History of Sanskrit Literature*, pp. 852-53.
170. Keith: *The Sanskrit Drama*, pp. 283, 358.
171. *Ibid.*, p. 371.
172. Telang: *Kuttinimata*, V, 856.
173. Keith: *A History of Sanskrit Literature*: Preface, p. x.

which enabled him to reflect it in his writings. He says, " In writing this paper I flatter myself with two pieces of research; firstly I have discovered (Have I ?) the birthplace of Kalidasa; secondly his philosophy of life, that is a keynote to his poetry—most fascinating study that is yet taken up by any student of Kalidasa. . . The reader will find that the plots and incidents in the works of Kalidasa are modelled on the Pratybhijna philosophy of Kashmir with its initial curse, and a fixed period of separation and final union by recognition ".[174] The author has tried to show that Manigrama, modern Manigam was the particular village in which the great dramatist was born.

Chandraka: Chandraka is mentioned by Abhinavagupta in his commentary on *Natyasastra* of Bharata as a playwright of Kashmir. Kalhana also knows Chandraka as a great poet.[175]

Ksemendra: Of course, this versatile writer could not have forgotten to try his pen at writing dramas. Two of his dramas are quoted in his *Aucityavicara cara.*

Bilhana: Bilhana wrote *Karnasundari* in four acts. He is said to have written this book after the manner of *Ratnavali.* It describes the intrigues of a Chalukya prince, Karanadeva with Vidyadhara princess, and their eventful marriage with the consent of the queen.

(h) *Kathanaka* (*Fables and Fairy Tales*) The Kashmirian contribution to this field is noted below.

Ksemendra: Ksemendra's *Brhatkathamanjari* is, as the title indicates, only an epitome of Gunadhya's work. The work is divided into eighteen " Lambhakas " (chapters or sections). Ksemendra's work is important for its accurate material, rather than for the manner of presentation.

Somadeva Somadeva is the author of the other Kashmirian rescension. The merit of the *Kathasaritsagar*, " stands on the solid fact that Somadeva has presented in an attractive and elegant if simple and unpretentious form a very large number of stories which have for us a very varied appeal, either as amusing or gruesome or romantic or as appealing to our love of wonders on sea and land or as affording parallels to tales familiar from childhood ".[176] " Turning to the work itself," writes Mr. N. M. Penzar in the prospectus of Mr. C. H. Tawney's translation of this book, " one is amazed by the mass of stories of every conceivable kind it contains. . The collector of these stories, Somadeva was a man of genius who rightly ranks next to Kalidasa among Indian poets. His power of telling a story in a clear, entertaining and absorbing way is only equalled by the richness and diversity of his subject-matter. His knowledge of human nature, the elegance of his style, the beauty and force of his descriptions and the wit and wisdom of his aphorisms are masterly in their execution." Apart from the literary excellence,

---

174. Kalla: *Birthplace of Kalidasa*: Preface, p, 1.
175. Pandit: *Rajatarangini*, II, 16.
176. Keith: *A History of Sanskrit Literature*, p. 282.

Kashmirian rescension of the *Brahatakatha* is valuable from many other points of view. Firstly, it has saved from further deterioration the original character of the work as it was during the tenth and eleventh centuries when the Kashmirian authors flourished. Secondly, the *Kathasaritsagar* of Somadeva has preserved much valuable information which has proved of immense help in throwing light on many dark periods of Indian history, for instance those of the Nandas, the Guptas and that of Panini, etc. Thirdly, the works present a more or less accurate picture of the Kashmirian society in particular and of the Indian society in general.

(i) *History* The art of writing history was known in Kashmir from very early times. Many historians flourished at different times and each effected some improvement or other upon that of his predecessor. Their attempts rendered possible the work of Kalhana, which by the common consent of Eastern and Western scholars, is " the only work hitherto discovered in India having any pretentions to be considered as a history "

Kalhana was the son of Champaka, a minister of king of Harsa (1090 A.D.) of Kashmir. He was born and bred in Kashmir. He was well educated. He was deeply interested in grammar, astrology, medicine, music and dance. He was deeply versed in Indian culture. He wrote his book between the years 1148-50. A.D. He probably was a resident of Parihaspur, modern Paraspore—a village at a distance of a few miles from Srinagar.

Much has been written about Kalhana and his book the *Rajatarangini*. The standards used in appreciating the work have varied not only from country to country, but also from critic to critic. Kalhana's work, however, possesses certain outstanding features and merits, which not only mark him out as a great historian, but also show that he was not a mere accident in the history of Kashmir, but a genuine product of the Kashmirian culture.

The definition that Kalhana gives of a true historian is quite in the modern strain. He says, " That man of merit alone deserves praise whose language like that of a judge in recounting the events of the past has discarded bias as well as prejudice ".[177] Commenting on this Pandit says, " This gives a good definition of an honest chronicler as we could wish for, even in our own age of historical accuracy ".[178] Kalhana possessed an impartial and detached outlook and never wanted to take sides. When he comes to relate the events of his contemporary, King Jayasinha, he boldly says, " As we are judging the merits such as they actually are of the king, who is our contemporary, we shall acquit ourselves by recording a finding free from bias ".[179] He faithfully keeps his promise. He appreciates his kingly qualities. But he fearlessly

177. Pandit: *Rajatarangini*, I, 7.
178. *Ibid.*, p. 3.
179. *Ibid.*, VIII, 1551.

exposes his treacherous conduct[180] and criticises his ill-conceived policy,[181] and fearlessly narrates the distress under his rule.[182]

Again, quite in the strain of a modern historian, when describing certain facts with which he himself is not satisfied, he gives us the source of his information. For instance, recording the exploits of the Kashmirian king, Meghavahana, in Ceylon, and relating the stories about his superhuman powers, he says, " In describing such among other incidents which are incredible to the common people about that king, albeit he was of recent times, we feel embarrassed ".[183] Or when he relates the contradictory statement about the notorious conqueror, Mihirakula, his deeds of wholesale destruction of life or his deeds of piety and penance, he is anxious to assure us that he does not believe in such contradictory statements and that he records the information because the people say so.[184] When he tries to delineate the character of men and women, he feels the difficulty of portraying a man in his true colours and like an honest historian admits his own limitations. He says, " For in fully knowing the character of any man of determination no man is really an expert ".[185] An understanding of his own limitations perhaps had led him to strive hard to know the truth and perhaps this is the reason why the characters he has portrayed are so real and hence so historical.

Kalhana was not an armchair historian. He was an antiquarian. Before he sat down to write his history he collected and examined all the available materials. " He tells us that he inspected inscriptions of temples, memorials, or palaces, records of land grants or privileges (usually on copper plates), Pracastis, eulogies engraved on temples and other buildings, and manuscripts of literary works, which often record names of rulers and dates." [186] Commenting on the antiquarian interest that Kalhana possessed, M. A. Stein observes, " To find an author of Sanskrit poetry ready to take up the part of an antiquarian student, is a fact as rare as it is gratifying ".[187]

A study of the existing materials had brought to his notice some of the defects, i.e. mis-statements or incorrect statements in the works of earlier historians. He endeavoured to correct the mistakes and place before his readers a fairly accurate account of past events. Referring to earlier historians, their mistakes and his own endeavour to present a correct version of events he says, " Hence my endeavour shall be in this narrative of past events to repair by all manner of means where there is error ".[188]

180. *Ibid.*, VIII, 2083, 2229, 2186, 2381, 2978, etc.
181. *Ibid.*, VIII, 2969.
182. *Ibid.*, VIII, 2809.
183. *Ibid.*, III, 94.
184. *Ibid.*, VIII, 312-17.
185. *Ibid.*, VIII, 1552.
186. Keith : *A History of Sanskrit Literature*, p. 162.
187. Stein : *Rajatarangini* : Introduction, p. 26.
188. Pandit : *Rajatarangini*, I, 9, 10.

Kalhana, it deserves to be mentioned, did not stoop to be narrowly nationalistic; he was a cosmopolitan. He praised the Rajputs for their bravery and honesty, but the soldiers of his own time and country he depicted as cowards.[189] He praised the noble and heroic students of Bengal who, trying to avenge the murder of their king at the hands of a Kashmirian king, died fighting gallantly and recorded his praise for them in glowing terms.

"Kalhana wrote centuries before the Industrial Revolution and Technocracy; before even the invention of gunpowder and the printing press. Life then was not complicated as it is now and the problems of government were not so complex although his contemporary rulers found them difficult enough. He had not heard of the advocacy of the rights of man nor the denunciation of monarchy, but he says many things in his strictures, and caricatures of kings and priests, their morals and methods. He tells us in the colophone that he was the son of a minister of State and it is certain that he had not known want and had never worked for a living. But his heart goes out to the poor, and the down-trodden; he reveals his sympathy for the under-dog, denounces forced labour and expresses his horror of the slave trade of the Mlecchas (barbarians). As a historian his tendency is, however, towards humanistic studies and towards art rather than towards economic life although descriptions of famine, food prices, taxation, currency and other details of economic life are not lacking in his work. He gives both sides of all questions and points out of the faults as well as the virtues of the kings and other characters whom he describes. Further, his observations show that the achievements of the great are merely answers to certain big needs in society and that success was only possible because time was ripe. Hence he does not cover up faults of the State, an individual ruler or group of men."[190]

Enough has been said to show that Kalhana possessed quite a developed historical sense and that he was quite aware of the responsibilities of a true historian.

Kashmirians possessed a developed historical sense from very early times. Writing history did not begin with Kalhana. Many historians had preceded him and much historical literature was in existence when he wrote his book. "Kalhana tells us himself that he was not the first to seek to write a chronicle of the kings of Kashmir from the earliest days; it appears that extensive works of ancient date were contained in the royal chronicles, but these had apparently disappeared in his times through the energy of one Suvrata in composing a poem embodying them, evidently written in Kavya style, and, therefore, difficult to follow. He consulted also, he says, eleven works of former scholars as well as still extant *Nilamatapurana*. The polymath Ksemendra had written a *Nrpavali* which Kalhana censures for want of care, but which probably was a careful summary of his resources."[191] Some of the other historians he names are Padmamihira, Pacupata, Helaraja, Chavillakara, and Suvrata.

189. *Ibid.*, VII, 57, 85, 118, 1191; VIII, 324, 463, 800, 1322, 1340, 1706, 1866, 1880, 2251, 3157, 1082, 1047, 1149.
190. Pandit: *Rajatarangini*, p. xxvii.
191. Keith: *A History of Sanskrit Literature*, p. 161.

Kalhaṇa's predecessors were historians of no mean merit. The records left by them and utilised by Kalhana amply testify to this. Scientific accuracy in Kalhana's works begins with the year 813 A.D. Kalhana wrote his book in the years 1148-50 A.D. To compile an accurate history for the long period of 337 years is nearly impossible in the absence of an accurate and correct material. His reliability for this period directly reflects the reliability of his immediate predecessors.

As for the historians of the still earlier age, Pandit would not like us to throw their achievements overboard as unreliable. According to him even the earlier portion of the *Rajatarangini*, which has been compiled from the writings of the earliest writers is fairly reliable. This is what he has to say in this regard "My humble estimate, accordingly, of the value of the *Rajatarangini* as a historical chronicle is, that it is fairly reliable upto the end of Gonada dynasty or the end of the reign of Baladitya, 596 A.D., and is as accurate as we have a right to expect from the commencement of the Karkota dynasty upto the year 1151 A.D., a period of some 555 years." [192]

The possession of a developed historical sense was not the monopoly of a few historians alone. The average Kashmirian also possessed it. His attempts to preserve not only the historical writings of his country's historians, but also inscriptions, coins, and royal endowment-documents, etc. amply testify to his historical consciousness. Sir M. A. Stein, one of the most authoritative writers on Kashmir history has observed and stated this fact in very clear words. He says, "In other parts of India the historical student is obliged to reconstruct the general outline of the country's history with the help of the scanty and frequently uncertain data; which a patient examination of inscriptions, coins, and occasional references in literary works may reveal, and he can scarcely ever hope to recover a continuous account of the leading events for a couple of centuries. If the student of Kashmirian history finds himself in a far better position, this is due to the preservation of documents alluded to; they testify to the continued existence of that genuine historical sense in which the Indian mind on the whole is so conspicuously absent." [193]

Writing of history did not cease with Kalhana. In fact that should have been the most unnatural happening in a country with a developed historical sense. History continued to be written after Kalhana also. Zonaraja and his pupil Srivana wrote *Zainarajatarangini*; Prajabhatta wrote *Raja-valipaka.* His work was continued by his pupil Sukha. Jalhana wrote an account of the king of Rajpuri. Cambu was another historian who wrote a panegyric on Harsadeva. These latter historians flourished after the thirteenth century and, therefore, do not come under the scope of this work.

(j) *Medicine*: Kashmir has a tradition about Caraka, the great exponent of ancient Indian medicine. Till recently much controversy

---

192. Pandit R. S.: *Rajatarangini*, p. 598.
193. Stein: *Rajatarangini*: Introduction.

existed among scholars about Caraka's age and homeland. But the Buddhistic literature discovered by Professor Sylvain Levi in China showed that Caraka was the court poet of the Indo-Scythian King Kanishka in the first century A.D.[194] This newly discovered literature is discussed by Principal Hoernle in the treatise on the authorship of *Carakasamhita.* Examining the question of Caraka's birthplace from various points of view, the author comes to the conclusion that Caraka belonged to Kashmir,[195] but he has nothing to say about the exact place of his birth. G. N. Mukhopadhaya notes that there is a tradition among scholars "whose opinion is entitled to respect", that Patanjali and Caraka are not two distinct personalities but identical.[196] This tradition is identical with that of Kashmirians. And if we may accept the tradition of the identity of Caraka and Patanjali, the birthplace of Caraka is that of Patanjali, which is Gudhar, a village situated on the right bank of the stream Visoka.

The *Carakasamhita* has not come down to us in its original form. It is said to have been redacted more than once. The work, as we know it today, consists of eight sections. Of these Caraka himself is believed to have compiled the first five sections and some chapters of the sixth section. The remaining portion of the work, i.e. the last seventeen chapters of the sixth section and the whole of the seventh and eighth sections were written by another great physician Drdhabala (seventh and eighth centuries A.D.). It is believed that Drdhabala not only supplied the sixth, seventh and eighth sections, but also redacted the whole work.[197] *Carakasamhita*, therefore, as we have it from the ninth century onwards, is more the work of Drdhabala than that of Caraka himself, for it is not known exactly how far Drdhabala 'improved' or 'cooked' the original text of the work.

Drdhabala has given some information about himself in a passage at the end of the eighth section. An examination of the passage led Dr. Cordier to assume that the physician lived in the Punjab. But the later researches of Principal Hoernle disproved this view. He says,

"He, i.e. Drdhabala was, as he himself informs us in a passage at the end of the eighth section, a native of a settlement (pura) called Panchanada, i.e. five-stream land. In India, the confluence of streams is apt to be treated as a sacred place of pilgrimage (tirtha) and there are several such places called panchanada. Anciently one of them appears to have existed in Kashmir near the confluence of the river's Jhelum (Vitasta) and Sindhu. Its place is indicated by the modern village Pantzinor (literally five channels) which lies close to what was the original site of that confluence before its removal to its present site, in the latter half of the ninth century, in the reign of King Avantivarman (855 A.D.). It is this Panchanada which probably was the home of Drdhabala. The early commentators of the eleventh and thirteenth centuries (e.g. Carakapanidatta and Vijaya Raksita) often refer to a Kashmirian recension (Kashmira patha) when commenting on passages

194. Mukhopadhaya: *Surgical Instruments of Hindus*, p. 6.
Paul Masson-oursel: *India and Indian Civilization*, p. 208.
195. Hoernle: *Authorship of Carakasamhita.*
196. Mukhopadhaya: *History of Hindu Medicine*, Vol. II, p. 779.
197. Hoernle: *Osteology*, pp. 2, 3.

of the earlier portion of the compendium, i.e. the portion written by Caraka himself."[198] The author adds in a footnote, "The usual identification of Panchanada with the Punjab is untenable; for Drdhabala clearly indicates a locality (pura) not a country as his home".[199]

Dr. Cordier had attempted to identify this Panchanada pura with the village Panjpur near Attock. But this identification is totally incorrect. Principal Hoernle exposed the method of Dr. Cordier by revealing to us that there exists no such village as Panjpur near Attock and that the author had unscientifically depended for his information upon an Indian Nagri map and an Indian post office guide.

Much has been written about Caraka and his work. He is the most original writer on Indian medicine. The amount of respect that the Indian system of medicine enjoys in India or abroad is mainly due to him and his work, the *Carakasamhita.* It was translated into Arabic in the beginning of the eighth century and his name, "Sharaka Indianus, occurs in the Latin translators of Avincinna, Rhazes and Serapion".[200] Similarly, the book was also translated into Persian and made available for the use of Persian physicians.[201]

Surgery does not seem to have been well cultivated by the Kashmirians. There are no treatises on this subject available from the Kashmirian authors. The science, however, was not unknown to them. Some of them wrote commentaries on the *Susruta-samhita,* the most important being that of Ubhata. This surgeon flourished in the twelfth century A.D.

Hospitals were also built in Kashmir at a very early time. Ranaditya is the first king to whom Kalhana ascribes the building of the first hospital. He is believed to have reigned about the fifth century A.D. Here it is interesting to note that the first public hospital in Europe, Maison Dieu of Paris was opened two hundred years later in the seventh century A.D.

The development of the medical science in Kashmir after the ninth century has not been impressive. No able physicians flourished and no great works were written. At any rate, the Kashmir physicians have not been able to keep pace with Kashmirian poets, grammarians, rhetoricians, historians of the period after the ninth century.

The contribution of the Kashmirian to the different branches of learning, as sketched out briefly in the pages of this chapter, is not, in fact it could not be, detailed and comprehensive. The object in view has not been to evaluate the nature and quality of their work—this can properly be done in separate treatises alone—but just to indicate the comprehensiveness of the system of education that produced this wealth of literature. The quality, the quantity and the variety of Kashmirian

198. Hoernle: *Osteology,* pp. 2, 3.
199. *Ibid.,* pp. 2-3 ff.
200. Mukhopadhaya: *History of Hindu Medicine,* pp. 9, 10.
201. *Ibid.,* p. 10.

production is an eloquent commentary upon not only the system of education and its efficiency, but also upon the spirit and character of the people. It is significant to note that the promotion of learning reached the highest water-mark during the period in which the people possessed a clear-cut and definite outlook on life, its aims and ideals. It was this clear vision of planned life which supplied them with the necessary urge and ability to find means and methods to translate their dreams into realities.

11. *Arts and Crafts* Cultivation of arts and crafts in Kashmir appears to have begun at a later date for we have no monuments or specimens of art going back to the very ancient period. This is particularly true of architecture. The only monuments which can with certainty be ascribed to this period are the structures discovered at Harwan and Ushker. The finds at these places have been assigned to the sixth century A.D. They do not show much artistic merit; they, however, betray the Gandharan influence in its process of penetration into the valley. The age that followed this period is well known for the development of art in Kashmir. Chronologically, " It may be said with a fair amount of accuracy to begin at about sixth to seventh centuries. It ended with the transfer of the kingdom from the Hindu to the Muslim hands in A.D. 1339 ".[202] The chief representatives of this period of architecture are the temples of Martanda and Avantipura. The former was built by king Lalitaditya and the latter by Avantivarman. Those structures show that the Kashmirian architecture is not a prototype of any of the styles evolved in the countries around it, but has a distinct style of its own. " As a whole," says Captain A. Cunnigham, " I think that the Kashmirian architecture with its noble fluted pillars, its vast colonades, its lofty pediments, and its elegant trefoiled arches is fully entitled to be classed as a distinct style." [203] What lent charm to the Kashmirian architecture was not only the beauty of its style, but also the proper choice of site. Commenting on the site chosen for the Martanda temple, Sir Francis Younghusband says, " But it is at Martanda that there is the first, and as it is not the only typical Kashmir architecture at its best, but is built on the most sublime site occupied by any building in the world—finer far than the site of the Parthenon or the Taj or of St. Peters or of the Escuriat. We may take it as the representative or rather culmination of all the rest and by it we must judge the people of Kashmir at their best ".[204]

Kashmirians appear to have excelled others in the art of architecture. " The superiority of the Kashmirian architecture," writes A. Cunnigham, " over all other Indian buildings would appear to have been known to the Hindus themselves for one of their names for the people of Kashmir is Sastra-silpine or architect, a term which could only have been applied to them on account of their skill in building."[205]

---

202. Kak: *Ancient Monuments of Kashmir*, p. 52.
203. Cunningham: *Journal of Royal Asiatic Society*, Sept. 1848.
204. Younghusband: *Valley of Kashmir*, p. 118.
205. Cunningham: *op. cit.*

Almost all the Kashmirian architectural monuments are of small size—even the Martanda Temple, the largest of its kind, is of modest dimensions, 60 feet by 38 feet. Kashmirian architectural monuments look pigmy in comparison with those of other parts of India. But the smallness of the size does not detract from their artistic merit. On the contrary it shows that the Kashmirians could express their artistic faculty in spite of the country's poverty.

The ideals that governed the artist in Kashmir were, as stated earlier, the same as those that governed the artist in India. The Kashmirian artist also did not exhibit his individual genius or originality. His art expressed the necessities of current theology, changes in racial psychology, vitality and taste. The ideals of art, as a consequence, changed with the racial, not individual outlook. This is best illustrated in the sculptures that were produced when Buddhism gradually yielded place to Kashmir Saivism.

Sculpture like architecture, appears to have been cultivated rather late. The earliest specimens discovered at Ushkar and Harwan belong to the fourth and fifth centuries A.D. The finds discovered at these places do not show any real artistic merit, But they do display the influence of foreign countries. "The Harwan titles possess an interest of their own as they reveal certain Sassanian and Central Asian characteristics upon a background of Gandhara art of about fourth and fifth centuries A.D. The Ushkar finds display all the features of later Gandhara art and may on the analogy of Julian sculptures be assigned to the fifth century A.D."[206]

By the beginning of the ninth century Kashmir was undergoing an ideological change. Buddhist culture was getting transformed into a new culture. The change in the ideology of the people was producing a change in the ideals of the artist also. One of the earliest illustrations of this change is to be found in the Brahmanical image at the village Brar. "It clearly shows the transition between the quasi-classical Gandhara art and the medieval Indo-Kashmir sculpture."[207] It further shows that the Kashmirian artists were struggling to assimilate the foreign influences and giving them a new orientation. This process was greatly accelerated by the remarkable originality that characterised the period. The chief representative of this ideological change, as represented in sculpture, is the Vishnu Image at Avantipura. The image has been described by R. Bahadur R. C. Kak. He writes,

"As we turn from the Buddhist sculpture of Pandrethan to the Vishnu Image of Avantipura, we are at once struck with the remarkable change that has occurred in the artist's conception of his God. In the latter we find no trace of serenity, that noble passionlessness, that inward gaze, which only comes from the contemplation of the infinite qualities with which the Gupta artists invariably endowed his creations and remnants of which are still to be seen in the Pandrenthan fragments. The Avantipora sculptures, while extremely delicate in the portrayal of the body,

206. Kak: *Ancient Monuments of Kashmir*, p. 34.
207. *Ibid.*, p. 34.

and undeniably beautiful in their general effect present a strong contrast in facial expression, far from displaying a passionless calm, exhibits a brain in which an overwhelmingly powerful will controls all faculties of the mind. The God who was a Saviour is transformed into a Master. The eyes are wide awake and piercing. As an external symbol of the unbending disposition of the God, he has been armed with a dagger, a fact which in itself is remarkable in an image of Vishnu. Added to this, the Lion's and Boar's heads representatives, no doubt of the Man-Lion and Boar incarnations of Vishnu—placed on either side of the human head, and the demon's head behind, and we at once see what elemental passions this Hindu God was supposed to symbolise." [208]

This Vishnu image at Avantipura was the culmination of the Kashmirian school of sculpture. It expressed the spirit of the age, the dreams of an epoch or the ideals of a race.

The art decayed after the twelfth century A.D. The Kashmirian society during this period was fast deteriorating. It was replacing high ideals of life by easy and pleasant ones. The society was growing sensuous and acquiring habits of ease and idleness. With this decline

" the quality of artistic production also deteriorated. The artist lost his mastery over his materials. The sculptures became heavy and clumsy and altogether wooden. The virility and masterfulness which are distinguishing characteristics of the art of Avantivarman's time, are missing in the later samples. The limbs now hang listless, the face is inane and the eyes vacant. The vague outline of features and the thick sensuous lips reflect on the degenerated taste of the times and the low ebb to which the art of the sculpture had reached in those troublous days which spread over the eleventh and twelfth centuries, and which prepared the way for a daring *coup d'etat* of a solitary Mohammadan adventurer, Shah Mir, who at one stroke possessed himself of the fair kingdom of Kashmir and its queen Kota Devi." [209]

No specimens of ancient *painting* have yet been discovered in Kashmir. It may be that no specimens have survived due to the ravages of time, but as no serious efforts have yet been made in the direction, it looks not improbable that some specimens may yet be discovered at some future time. In India also there was a time when it was believed " that there was no such art as painting ".[210] But when serious efforts were made a wealth of paintings was discovered which banished the illusion of India's poverty in the art of paintings. At present, however, we are driven to content ourselves with the information that literary sources alone can give.

One of the earliest literary evidences is provided by the *Kuttanimata* of the poet Damodhargupta (ninth century A.D.). He mentions Chitrasutra as a subject studied by Malati, the heroine of the book. Chitrasutra, as the name shows, was a book on the science of painting and sculpture. Taranatha, the Tibetian historian gives more information on

208. Kak : *Handbook to the Numismatic and Archeological Section of S. P. Museum*, p. 5.
209. *Ibid.*, p. 7.
210. Brown : *Indian Painting*, p. 5.

the point. He says that Kashmir had developed a school of painting as early as the fourth century A.D. As quoted by Havell, he says, " In Kashmir, too, there were in former times followers of the old Madhyadesa. Later on a certain Hasurya founded a new school ".[211] Mr. V. A. Smith has accepted this statement of the Tibetian historian and has tried to identify his Hasurya with Hamsaraja, a minister of queen Didda (A.D. 1000).[212]

The influence of this Kashmirian school reached as far as Cambodia. We have seen how Kashmir sent out teachers who spread the Buddhist and Hindu cultures in the countries around. Thanks to the efforts of some research scholars, we have come to know something about some of them. But unfortunately we do not know much about the artists who carried the Kashmirian art of painting to other countries. All that historians have to say about them is that a band of adventurous artists started from Taxila, where they were stationed, and moving from place to place, finally settled in the South-East corner of Asia now known as Cambodia. These adventurers " carried with them the art traditions of Kashmir school, and in the centuries that followed, down to the fourteenth.. their descendants built series of temples which according to Fergusson are ' as large and as richly ornamented ' as any to be found in any part of the world ".[213] It is really unfortunate that no specimen of a school of painting whose influence reached as far as Cambodia, and which flourished so well in that far-off land, have been preserved in the land of its birth.

Wood-carving is an ancient art in India. It is an important industry in many parts of India, specially Mysore, Kerala, Gujarat, Kathiawar, Nepal and Kashmir. In Kashmir, however, no specimens of Hindu times have yet been discovered. Perhaps it is difficult to find any owing to the perishable nature of the material. It is also probable that the Kashmirians did not pay as much attention to wood-work as they paid to work in stone. The craft, however, received full attention during the Mohammedan times.

Shawl manufacturing is a very ancient craft in Kashmir. Kalhana mentions it in the very first chapter of his chronicle.[214] Its beginnings have been traced from the days of Mahabaratha. In Europe, Kashmir shawls were made famous by Napoleon Bonaparte. It is a flourishing industry in the present days also.

12. *The Decadence its causes* A country is great not only because it possesses high ideals, but also because it has the urge and ability to live upto those ideals. The nearer it is to its ideals the greater it is, and the farther it recedes the weaker it becomes. When high ideals fall away, life loses its motive force; creativity comes to an end and confusion ensues. Other factors join the process and speed up the hour of

211. Havell: *Ideals of Indian Sculpture*, p. 136.
212. Smith: *History of Fine Arts in India*, p. 305.
213. Havell: *Indian Sculpture*, etc., p. 136.
214. Pandit: *Rajatarangini*, I, 207.

annihilation and collapse. The history of the Kashmirian people provides more than one ghastly spectacle of this relentless phenomenon. One such appeared within the period under discussion, between the latter half of the eleventh and the first half of the fourteenth century. During this period, the high ideals the proper cultivation of which had given birth to a rich and full life in the various fields of human activities, were systematically given up in favour of a life of ease and pleasure. The Kashmirian literature of the eleventh to fourteenth centuries amply reveals this decadence of the spirit of Kashmir. Some of the writers of this period appear to have been quite conscious of this general decay of character and were anxious to bring it to the notice of the society. But the society seems to have been so deeply steeped into these ills that it did not, rather could not pay any heed to these warnings. Consequently, a general decadence set in and led to the final collapse of the then existing state of society and its institutions. These undesirable factors developed gradually and with their growth the society lost all urge and ability to fight for survival. This process of disintegration was helped by the march of events in and around Kashmir.

The Kashmiri now became intriguing and deceitful and ready to sell his master, if that would serve his purpose. In this he was not guided by moral or spiritual values. He was idle and loved gossip. He did not value time. He believed in witchcraft. Government officials of all ranks were degenerate and dishonest. They had lost sight of the high ideals of honesty and living an upright life. The Bania was a cheat. He did not believe in fair, and honest dealings. He did not look to his own comforts, nor to those of his family. He was not a social being and what he cared for was hoarding money. The purohita was ignorant, superstitious and morally degraded. The physician was governed not by the high ideals of selfless service to suffering humanity, but by mercenery spirit. The teacher was idle in his own profession, but active in politics. He had given up his legitimate work, besides he had developed a weakness for money and given up the commendable ideals of plain living and high thinking. The society was degenerate in every respect. Such a society could not continue to exist for long, and soon it collapsed.

Here is presented a picture of the society of Kashmir from the time of Asoka to the beginning of the fourteenth century A.D. Since then there has been no material improvement except for some brilliant flashes. Kashmirians have sunk into the sea of insignificance for a considerably long time. At present those living in the valley itself do not have to their credit a Tagore, a Raman or a Ray. This does not compare well with their former position. And yet theirs is a story which reveals that in their onward march they have lived through the periods of glory, of rise and fall; and rising and falling they have learnt to rise up again. This continuity of life and freshness of spirit they owe to their racial and cultural heritage. We have in them a gifted people living in what may be called the garden of God. They have proved in course of history their latent capabilities and it behoves us of the present to see that the genius of Kashmir is once again allowed to attain efflorescence, so that

it might make its own contribution to enhance the glory of Free India. If we may attain this coveted end, we have to begin at the very beginning—the children of Kashmir. We have to overhaul the system of education and reorient the same with due regard to the natural capabilities of the people and the needs of the future. If the present thesis helps the understanding of the spirit of Kashmir even though it be in a very humble measure, the author feels himself amply compensated for it will then serve as basis for the reorientation of the education of modern Kashmir. Let us build the glories of the Kashmir to be on the firm foundations of the glories of Kashmir that were.

APPENDIX

EXISTING RUINS OF SOME MATHAS AND VIHARAS

1. *Krtyasrama Vihara*: This Vihara was built by Jaluka. O'Kong visited it when he was in Kashmir. The name Krtyasrama survives in that of the present village Kitsahom.

2. *Huskapura* This town named after Huska has been identified with modern Uskur, a small village about two miles to the South-East of Varahmulla. Hiuen Tsiang stopped at the Vihara on his way to the valley. O'Kong who followed Hiuen Tsiang also visited it. The Vihara was built by Lalitaditya.

3 and 4. *Theda and Bhimadevi*: Both these were founded by Samdhimat. Both are situated on the Eastern shore of the Dal Lake. Both were used as places of pilgrimage for a long time. The one has been identified with modern Thid and the other Bran.

5. *Amrtabhavana*: This Bhavana was founded by Amrtaprabha, queen of Meghavahana. It has been identified with O'Kong's Ngo-mi-to-po-wan. The village that grew around it is known as Antabhavan. The ruins of the Vihara can still be seen.

6. *Nadavana*: Yakadevi, a queen of Meghavahana, laid its foundation. The locality of the Vihara has been identified with Narvor.

7. *Indradevibhavana*: This Bhavana was built by another queen of Meghavahana.

8. *Khadanavihara*: This Vihara was founded by one more of Meghavahana's queens. The name of Khadanavihara may be preserved in that of the village Khadaniyar.

9. *Jayandravihara*: Jayandra, uncle of Pravarsena, built this Vihara. It has been identified with Che-ye-to-lo of Hiuen Tsiang.

10. *Skanagupta*: The Matha was built by the ministers of Yudhisthera II. The locality has been identified with Khanabhavan, a "mohalla" in Srinagar.

11. *Jaya*: The Vihara was founded by the ministers of Yudhisthera II. O' Kong visited it.

12. *Matha for Pasupata*: The Matha was built by Ranaditya on the Pradyumnapita, modern Hariparbat. The Eastern slope and the foot of the hill Haraparbat was probably the site of this Matha.

13. *Pratapapura*: Pratapditya II laid the foundation of this Matha. It has been identified with modern Taper. The site was excavated recently by the State Archeological Department.

14. *Rajvihara*: The Vihara was built by Lalitaditya. It was situated within Parihaspura, modern Paraspore.

15. *Cankunavihara*: Cankuna, a minister of Lalitaditya built it. It was later repaired by Sussala.

16. *Pancahasta Matha*: This Matha was founded by Suravarman, a step-brother of Avantivarman. Pancahasta is the modern village of Panzath in Divasar Pargana.

17. *Suramatha*: Sura, a minister of Avantivarman built it. The Matha was situated in the capital. Later it became the scene of many historical events.

18. *Gopala Matha*: The Matha was founded by Sugandha Devi, queen of Gopalavarman. The name survives in the present Guripur or Gurapor, a quarter in Ranivor; modern Rainawari.

19. *Bhattaraka Matha*: The name survives in that of Bradimar, a 'mohalla' in Srinagar.

20. *Didda Matha*: Queen Didda built it. It has left its name to the Diddamar quarter of Srinagar.

21. *Suryamati Matha*: The Matha was founded by queen Suryamati. It was rebuilt in Kalhana's time.

22. *Jayavana Matha* Kalasa built this Matha at Jayavana, modern Zevan, the birthplace of the famous poet Bilhana.

23. *Sulla Vihara*: This Vihara was built by Uccala in honour of his sister. Its building was completed by Jayasimha.

24. *Nava Matha*: Jayamati, Uccala's queen, built it. Subsequently it became the scene of many historical events.

25. *Bhuttapura Vihara*: Bhutta, the younger brother of Jalha built this Vihara during the reign of Jayasimha. The village that grew round it is now known as Butapor.

Note.—There exist in Kashmir many more ruins of ancient Mathas and Viharas, but these have not been included as no reliable information about their founders is yet available.

An Analytical and Experimental Investigation into the Nature and Effects of Item Contents of Intelligence Tests

By

Dr. A. S. GAVADE, Ph.D. (Leeds)

The Indian Institute of Education, Bombay

[This investigation was conducted by Dr. A. S. Gavade, Ph.D., at Leeds University under the guidance of Prof. G. P. Meredith. Its scope and utility are best described by the learned Professor who writes:—

> "Dr. A. S. Gavade came to this university in October 1948, wishing at first to work for the degree of M.Ed. After some discussion with me he chose as his topic for research a detailed study of the differential effects of the item contents of intelligence tests arising from the differences in children's experiential background—a problem of fundamental importance when the adaptation of tests devised in one area or country for use in another is being considered. It was not an easy problem, both by reason of its intrinsic complexity and also because of the lack of established techniques for such an investigation. By the end of twelve months two things had become clear. The first was that the problem was more appropriate for a Ph.D. thesis than for an M.Ed. thesis. The second was that A. S. Gavade possessed the mental calibre required in a Ph.D. candidate. The only doubt was the time factor as it would be necessary for him to return to his country early in 1951. In taking the risk he showed that he possessed courage in addition to energy and ability, and events have justified him.
>
> In his research Dr. Gavade has throughout kept a strict eye on the essentials of his problem. It was clear that no comprehensive solution was feasible in so short a time and by one man's work alone, and rather than spend his time amassing quantities of impressive but uninformative statistics he concentrated on developing a plan of investigation whose qualitative meaning and theoretical basis should be quite clear and explicit. The value of this lies in the fact that since no definitive conclusions could be reached from the necessarily restricted sample of data (consequent upon the limited time available), the whole research can serve as a clearly designed pilot experiment to pave the way—it is to be hoped—for a team research of greater extent."
>
> It is hoped that psychologists will find this study both stimulating and interesting.—*Madhuri R. Shah, Managing Editor.*]

"Intelligence cannot work without ideas, and the quality and the number of the latter are largely dependent upon accidents of environment. In our efforts to

measure intelligence, therefore, we always measure intelligence plus a certain kind and amount of training."—*L. M. Terman and H. G. Childs*: "A Tentative Revision and Extension of the Binet Simon Measuring Scale of Intelligence", Journal of Educational Psychology, 3, 1912, pp. 61-74.

"All intelligence tests yet published depend for their validity on experience, on association and on the general and specific education of the individual. However, such tests, depending as they do *absolutely* on the experiences of those tested, are valid in showing differences in native mentality when, *and only when*, those tested had common experiences and similar interests."—*S. C. Colvin*: "Mental Tests and Linguistic Ability", Journal of Educational Psychology XIV, 1923).

"Intelligence tests measure only the ability to succeed in our particular culture." —*A. Anastasi* Differential Psychology (New York), 1937, p. 511.

"All that has been shown in fact is that they (intelligence tests) measure the ability to answer intelligence test questions."—*J. Blackburn*: Psychology and Social Pattern (London), 1945, p. 68.

"Whatever may be the truth about intelligence as an innate equipment, any attempt to measure it must use special media, and demand other activities besides those of intelligence in any strict sense, and that for both these reasons the score achieved is to some important degree determined by environmental and cultural influences."—Professor *Sir Frederic Bartlett* in his preface to J. Blackburn's "Influence of the Social Environment on Intelligence Test Scores", London, 1949.

1. *Statement of the Problems*: Intelligence tests are recognised today as a standard measure of intelligence and are being increasingly used for the purpose of different kinds of selections wherein a knowledge of the individual level of intelligence is considered essential, e.g. in the selection of children for different types of school education, in the selection of personnel for different professions, or for higher administrative jobs in industry. These important applications of Intelligence tests make it imperative to see that they are accurate and efficient instruments of prognosis.

The problem of the measurement of intelligence is not an easy one because intelligence is a theoretical concept and cannot, therefore, be measured directly. As in the case of electricity or temperature—or similar theoretical concepts in physical sciences—it must be measured through indirect means. Electricity is measured through its effect on resistance, and temperature is measured through its effect on the volume of mercury or the like. In both these measurements, some media are employed and, being physical substances, they are considered *constant* for all purposes of measurements, so that the scales based on the measurements obtained through these means can be considered as *standard*. All measuring scales are, in a way, arbitrary in so far as the scales are concerned; but the media employed are invariably characterised by the constancy of their nature. In designing tests for the measurement of intelligence, psychologists adopt a similar technique. The media employed are the test items in Intelligence tests. The test items are made up of elements such as words, symbols, numbers, pictures, etc. These test elements are constant in their physical status—size, shape, colour, etc.; but a successful solution to a test problem does not depend so much on the physical status of these test elements. Success in responding to test situations

correctly depends mainly on the grasp of the meanings attached to these elements, meanings in their proper relations within the group of these elements. The test constructor tries to select elements in his test which are within the common experiences of every child and thereby tries to ensure that the meaning attached to these elements is the same for every child. The reasoning behind such an assumption is that it is possible to select elements from within the common experiences of every child. Even if we assume, for the purposes of argument, that it is possible to select test elements from within the common experiences of every child, the degree of familiarity with the test element will vary from child to child according to the child's interest, school education and cultural background and, to that extent, the meanings attached to these test elements will vary not only in degree but occasionally in kind as well. Moreover, in practice the test constructor with the aid of statistical tools takes the average of all backgrounds, social and cultural, of all children and the resulting factor is his concept of the child's common experiences. The very concept of average admits of deviations from the average and, therefore, the so-called "common experience" ceases to be "common" to every child and, therefore, meanings attached to the test elements vary from child to child. The basic principle underlying all measuring scales is that the medium must remain constant so as to have universal application. The media in the existing Intelligence tests—meanings attached to respective test items—vary from child to child and, therefore, the measurements on such a scale can have neither universal application nor even national application. So long as test items are selected in the aforementioned manner, one and the same intelligence test cannot become a measuring scale of intelligence for all children. The truth of this statement will be illustrated by examining some test items from existing Intelligence tests.

(*a*) "If it takes longer to boil an egg than it does to boil potatoes, write 'egg', if not, write XXIII in ordinary figures." [1]

A successful solution to this test problem will depend on the child's knowledge about the time required for boiling an egg and boiling a potato. The child might have obtained this knowledge either through personal experience or observation. This experience is presumed by the test designer to be within the experience of every child. A child from an orthodox Hindu Brahmin family in India is not only prohibited from eating an egg but is not allowed to touch it. Such a child is not likely to have any knowledge about the time required to boil an egg. The failure of such a child to answer this test question correctly cannot, therefore, be attributed to lack of native intelligence. This test item may be a very good item for testing the intelligence of *some children* but it cannot be a suitable item for testing the intelligence of *every child.*

(*b*) Underline the *different* one: Inch, yard, metre, pint, mile, foot.[2]

---

1. *Burt*: Northumberland Standardised Tests, III, General Intelligence, 1925, p. 2.
2. Moray House Intelligence Test 34, 1948, p. 4.

The test designer expects a child to underline the word " pint ", as it is a measure for liquids while all the rest are measures of distances. A child brought up in a family having predominantly French influence and who is familiar with the superiority of the metric system over the British system of measurements might underline " metre " because, according to that child, it is the only French measure among the group of British measurements. Are we justified in treating such a reply as incorrect ? The child's cultural background has determined its approach to the test problem.

It seems pretty clear that it is not possible to tap the effect of every child's intelligence through the *same medium* as the meanings attached to the test elements in the medium vary according to the child's experiential background. Comparison based on such tests cannot be fair to all children. A *single measuring scale of intelligence* as now constructed, however perfect, is *not*, therefore, *adequate to measure every child's intelligence.* This suggests the necessity of constructing different types of measuring scales of intelligence *adapted* to the *experiential background of the individual child.* A similar suggestion has been made by Professor Sir Frederic Bartlett in his preface to " Influence of the Social Environment on Intelligence Test Scores." He observes : " Identically the same level of mental function may perhaps be elicited by tests which differ in content from group to group, and so, at least approximately, equalise the effect of social environment and history." [3]

The principle of constructing different measuring scales adapted to the experiential background of the individual child, though new to mental science, is not new to the science of measurements. A similar procedure is followed in the physical sciences. A mercury in glass thermometer would be an unsuitable instrument to measure the hotness of the hydroflouric acid as it will react on glass. A platinum resistance thermometer could be an adequate instrument for the purpose. And neither of these is suitable to measure the temperature of a hot roller where a thermocouple is used. Thus different types of thermometers had to be designed for different types of hot bodies, adapted to the latter's characteristics, yet all measuring the single factor, temperature.

The acceptance of the principle of individual tests adapting to the experiential background of the individual child will involve practical as well as theoretical difficulties. The practical problem is to create a sufficient number of test problems suitable to different experiential backgrounds. And when we succeed in constructing such individual tests, the next problem will be to compare the scores obtained on such individual tests. We have no means, at the present, of comparing scores. We have to devise a theoretical scale (comparable to the Absolute Scale in the measurement of temperature) which will enable us to put all such scores on a single theoretical scale.

---

3. See J. Blackburn, " Influence of the Social Environment on Intelligence Test Scores ", p. 2.

2. *Historical* : These are our problems. It would be interesting to study from the growth of mental testing how attempts were made to tackle some of the problems.

For this purpose, we need not go farther than Binet who has been rightly considered as the father of modern mental testing. All developments in mental testing since 1911 bear the stamp of his work and are mainly in the direction of refinement, expansion and modification of his scale, the main characteristics of his scale may be indicated as follows : —

(*a*) Measurement of intelligence through higher mental processes.

(*b*) Use of heterogeneous test problems.

(*c*) Freedom of test items from education and instruction.

(*d*) Teacher's estimate as a criterion.

(*e*) The concept of mental age.

It is the first three of these characteristics that have a bearing on our problem and need some notice.

(a) *Measurement of intelligence through the higher mental processes* : Binet discarded the sensory discrimination tests of the Galton-Cattell school as he found them inadequate to differentiate superior from inferior intelligence. His attempt to measure intelligence through " higher mental processes " is a distinct step forward. If we closely examine the concept of " higher mental processes ", it is the aptitude for dealing with symbolical materials, especially of a verbal or numerical nature, and this is regarded as the acme of intellectual attainment. The " primitive " man's skill in responding to very slight sensory cues, his talents in the construction of the objects, the powers of sustained attention and muscular control which he may display in hunting behaviour, are regarded as interesting anthropological curios which have, however, little or no intellectual worth. Such activities are not usually incorporated in intelligence tests. Anastasi points out that " by higher mental processes " is usually meant those aspects or segments of behaviour which are at premium in our society. Intelligence tests would be very different if they had been constructed among American Indians or Australian aborigines rather than in American cities. The criterion employed in validating intelligence tests has nearly always been a success in our social system ".[4]

(b) *Use of heterogeneous test problems* : The miscellaneous character of the test problems was thus explained by Binet-Simon : " In order to cover rapidly a wide field of observations, it goes without saying that the tests should be heterogeneous." [5] The first assumption behind this statement is that the wideness of the " field of observation " is directly related to the child's native intelligence. It is true that an intelligent

---

4. *A. Anastasi* : Differential Psychology, p. 511.
5. *A. Binet and Th. Simon* : The Development of Intelligence in Children, p. 42.

child's hunger for newer experiences is greater than that of the ordinary child and that the intelligent child derives greater benefits from the same environment. But it cannot be said that intelligence is the only determining factor in enriching the mind. A good home, for example, offers many opportunities to a child for gaining newer and newer experiences and, to that extent, a child coming from a poor home is comparatively handicapped. Versatility is, to a degree, a measure of intelligence ; but familiarity with different activities depends also on opportunities.

The second assumption is that intelligence can be better measured with numerous test problems than by any one test singly. Multiplicity of test problems assists in attacking intelligence from different angles and an average score on such a test gives an index of one's general ability. "The newer tests (Binet's)," write Hart and Spearman, "differ from the old ones both in purpose and in method. Their purpose is no longer either explicitly or implicitly, to gauge any 'faculties' such as apprehension, discrimination, etc., but instead to evaluate *general ability*. . Binet's series of tests are no longer selected, as was done before, by rigid analysis of the intellectual operations involved, but instead have as miscellaneous a character as could well be imagined. Moreover, the evaluation is never based on the result of any one single test, but on the collective result of a motley group of tests." [6] This is a sound principle in mental testing and, as Burt points out, " since Binet's day it has been the cardinal principle of intelligence testing *never to employ* (as had hitherto been done) *any one test singly,* but to combine tests of different types into an average measure ".[7]

(c) *Freedom of test items from education and instruction* The problem of constructing test items free from the influence of education or instruction appears an impossible one unless we restrict the meaning of the term " education " to the " formal education " that a child receives within the four walls of a class room. A child, in fact, learns much more in the wider world outside. This wider education depends partly on the child's innate capacity and partly on the opportunities offered. Binet rightly said that " the intelligence marks itself by the best possible adaptation of the individual to *his* environment ".[8] What is important in this statement is its specific reference to " his " environment and not to any environment. Porteus,[9] for example, while working among Australian aborigines finds that they are excellently adapted in their environment, " though they are much less equipped to deal with the rapidly changing world that surrounds and threatens to engulf them ". He was greatly impressed by the remarkable tracking skill displayed by the Australian aborigines. He constructed a test with photographs of footprints, the task was to match the two prints made by the same foot and he found

6. *B. Hart and C. Spearman*: "General Ability, its Existence and Nature", British Journal of Psychology, V, pp. 51-84.
7. *Board of Education*: Psychological Tests of Educable Capacity, p. 20.
8. *A. Binet and Th. Simon* : The Development of Intelligence in Children p. 301.
9. *S. D. Porteus* : "Primitive Mentality", Encyclopedia of Psychology, Philosophical Library, pp. 570-82.

that the Australians did practically as well as a group of 120 White high school students in Hawaii who were tested for comparison.

The opportunities of gaining varied experiences vary from individual to individual and, therefore, environmental background of each individual differs to a certain degree. It is not possible to construct test items which are *completely* free from the influences of education. As Blackburn points out, " A test which has been *proved* to be ' culturally free ' has yet to be developed." [10] Binet's hopes of creating such test items have not succeeded.

The Binet-Simon scale as well as the majority of the group tests of intelligence which were evolved to test large numbers of subjects in a short time were predominantly linguistic in character and consisted of verbal questions requiring verbal answers. These tests were unsuitable for illiterate persons as well as for those whose mother-tongue was different from that of the tests. Besides, those children and young men who had no adequate facilities for schooling were also handicapped to a certain extent. This was, in fact, a recognition of the principle that one and the same test is not adequate to measure every person's level of intelligence. The psychologists, therefore, developed performance tests which make no demand on verbal facility. The non-verbal test is thus an attempt in the direction of designing tests adapted to individual background and yet they are *still* single tests which attempt to measure every individual's intelligence.

A very important development in mental testing—factor analysis—took place mainly as a result of Spearman's Two Factor Theory. Spearman discovered that the " Co-efficient of Correlation " between different tests tended towards a peculiar and orderly arrangement—" hierarchical order " He explained this observation by his theory of Two Factors. He sought for those test items which satisfied his criterion—the tetrad difference—and rejected items which did not satisfy the hierarchic equation. Later on he replaced this criterion of the tetrad difference by the criterion of the " intercolumnar correlation " His theory of Two Factors was opposed by Thurstone and Thomson who proposed alternative theories of Multiple Factors and that of Sampling Theory. The criterion behind the tests of these different schools is whether the tests satisfy a particular statistical requirement. The individuals are not looked upon as individuals whose experiential background it would be important to know, but have been looked upon as sources of numbers yielding means and sigmas. They do not see whether a particular experience involved in test items comes within the experience of the individual child. The factor, itself, as Cattell points out " is not determinable by the individual and his environment but only in relation to a group and its environment ".[11] The factor loadings, therefore, depend upon the cultural pattern of the group tested. Wolfe explains this fact clearly when he says that " the factors depend upon the sample of the population studied. The factor pattern found by analysing a given sample will rarely be the

---

10. *J. Blackburn*: Psychology and the Social Pattern, p. 68.
11. *R. B. Cattell*: " The Measurement of Adult Intelligence ", Psychological Bulletin, 40, 1943, p. 171.

same as that which would have been found had the entire population been studied. The difference results from the fact that the sample is usually more homogeneous with respect to one or more traits than is the total population. This difference in homogeneity will alter the factor loadings and may introduce new factors ".[12]

Thus we see that in spite of the mathematical computation involved in construction of intelligence tests and use of refined statistical tools, it seems that the test designers *do not take into account individual child's experience* in designing tests. The present thesis is an account of an investigation whose aim was to find a remedy for this defect in the current procedure.

3. *Effect of Environment on Intelligence Test Scores*: The fact that children coming from better home background did almost always better on intelligence tests than those coming from poorer homes raised doubts about the precision of the measuring instrument of intelligence. This observation was made almost from the beginning of mental testing. Shortly after Binet published his metric scale of intelligence (1908), two Belgian authors, M. Decroly and Mlle. Degand, published a report of its trial on 43 children (boys and girls) in their school in Brussels. A summary of their results is given by Binet: " The only little Belgian who would present a very slight degree of backwardness is a child of twelve years, eight months, who has a level of twelve years ; this is very little. The amount of advance is on the other hand quite marked ; there are twelve children who are advanced more than a year, their advance being equal to two years or less ; there are eleven children who are advanced more than two years ; the greatest advance is two years and a half. *The average is a year and a half.*" [13] These results were not in keeping with what Binet found with his subjects in Paris. His subjects in Paris, on the other hand, presented " an equal amount of advance and backwardness " Binet attributed this difference to the differing social conditions. " The children studied are not of the same social conditions as ours." According to the information supplied by M. Decroly and Mlle. Degand their pupils belonged " to a social class in easy circumstances "

The Belgian authors knew the technique of administration of Binet tests " only through reading " and it is likely that they might have " made their estimates with excessive indulgence ". Such a charge cannot be brought against the work of Mme. Thevenot, Directress of a primary school for boys, rue Cadet. We have Binet's own authority—" She uses the measuring scale very well ". She measured the intelligence of 18 children—fifteen were between the ages of eight and nine and three between seven and eight—on the Binet scale. Her results are thus given by Binet: " Not one of her pupils is behind in intelligence, and many are in advance. Some are three years ahead, six are two years and

12. *D. Wolfe*: " Factor Analysis to 1940 ", Psychometric Monographs No. 3, University of Chicago Press, 1940, p. 39.

13. *A. Binet and Th. Simon*: The Development of Intelligence of Children, p. 317.

over ; as an average the advance is 1.7 (that is little more than one year and a half); it is an advance analogous to that of the pupils of Mlle. Degand." Binet attributed these extreme scores, as before, to the superior social conditions of the parents : " We think that the social conditions of the parents (the rue Cadet is located in a commercial quarter in the centre of Paris and is quite rich) must have an influence."

The Binet-Simon scale was far from perfect and we cannot attach great significance to these results. But this result has been confirmed by all later investigators including Terman and Merrill[14] and Burt. We reproduce below Burt's findings with respect to London school children which gives the intelligence of children classified according to occupations : —

TABLE NO. I

		Occupational Category	*Average Intelligence Quotient*
Class	I	Higher professional—Administrative	120.3
Class	II	Lower Professional—Technical executive	114.6
Class	III	Highly skilled—Clerical	109.7
Class	IV	Skilled	104.5
Class	V	Semi-skilled	98.2
Class	VI	Unskilled	92.0
Class	VII	Casual	89.1
Class	VIII	Institutional	67.2

(See : " Ability and Income ", British Journal of Educational Psychology, XIII, p. 84.)

The difference between Class I and Class VIII is well over 50 I.Q. points and whatever interpretation one would give to these results, one would agree with Neff when he says " that intellectual proficiency, as determined by score on standard intelligence tests, grades off with social level ".[15] Those who have belief in the efficiency of intelligence tests in differentiating intellectual levels, interpret these results in two ways. Firstly, as Terman and Merrill point out " these figures refer to *mean* values only, and that in view of the variability of I.Q. within each group the respective distributions greatly overlap each other ".[16] Secondly, it is pointed out that there is close relationship between the intelligence of children and that of parents and that these different occupations demand different degrees of intellectual proficiency which are accordingly inherited by the children. That is why the average intelligence of different social groups differ. It might be interesting to see what Hogben says on

14. *L. M. Terman and M. A. Merrill*: Measuring of Intelligence, p. 48, Table XII.
15. *W. S. Neff* : " Socio-economic Status and Intelligence—A Critical Study, Psychological Bulletin, 35, 1938, pp. 727-757.
16. *L. M. Terman and M. A. Merrill* : Measuring Intelligence, p. 48.

this point: " In a mixed population the distribution of intelligence quotients approximately follows a normal curve. This might result from a combination of a small number of genetic differences and large discrepancies between environmental agencies acting as limiting factors to their manifestation. It might also mean that a very large number of gene differences, affected very little by differences of general environment in which they are situated, determine the distribution of intelligence in a population. Eugenists often take it for granted that the latter is true. At present there is insufficient evidence for such a belief."[17]

The critics of intelligence tests, on the other hand, interpret these results as evidence in support of their view that intelligence tests measure the social level and not the intellectual level of the individual. They even go so far as to suggest that with the knowledge of his social status it is possible to predict the individual's I.Q. The constancy of I.Q. is attributed by them to the constancy of social environment. As Kuppaswamy puts it, " it is hazardous to assert that the constancy of I.Q. is an absolute measure of the ability of the individual and particularly more so when it is asserted that the amount of intelligence varies with the social status and earning capacity. It is probably that I.Q. remains fairly constant because educational and social environment remain fairly constant. Radical changes in environmental conditions do not occur in the lives of the many individuals ".[18]

The fact that the positive correlation has been found to exist between intelligence and socio-economic status does not, by itself, afford any conclusive evidence of the relative influence on intelligence test score of heredity and environment. But if we could study the factors operating at the extremes of environmental variations and measure corresponding variation in I.Q. such results might throw some light to the solution of the problem. One of the most interesting studies of this type was on " Canal Boat Children " by Hugh Gordon.[19] The so called " Canal Boat Children " belonged to the lowest social and cultural level. " Canal Boat population live an isolated life, almost patriarchal in character. In health, morals, etc. they compare favourably with town dwellers of the same class. The children are 'scandalously under-educated', their attendance at school averages about four to five per cent, compared with the eighty-eight per cent of children in ordinary Elementary Schools. " Their intellectual life is of a most meagre description, owing to their lack of education and also owing to their social isolation." These quotations from the report will give an idea of the social background of Canal Boat children. Gordon measured the intelligence of seventy-six children on Stanford Revision of Binet-Simon scale (1916) and found their average I.Q. of 69.6. This average is very low compared to an average of 87 found in a very poor school. When he compared the I.Q.'s of children in the same family, he made the interesting observation that

17. *L. Hogben*: Nature and Nurture, p. 69.
18. *B. Kuppaswamy*: "Laws of Heredity in Relation to General Mental Ability", Journal of General Psychology, 1947, pp. 29-43.
19. *H. Gordon*: Mental and Scholastic Tests Among Retarded Children".

" an increase of age is found to be associated in the same family with a decrease in mental ratio ". He further found "the correlation between intelligence (test) and age was (—) .755 P.E. ± .033 —a very high negative correlation, indicating unquestionably that with an increase of age there was a corresponding decrease in 'intelligence' ". The following table will give an idea of the variation of I.Q. of sixty children in twenty families, according to their age and place in the family : —

TABLE No. II [20]

	N	Mean Age	Mean I.Q.
IV child in family	5	5 — 9	88.6
III child in family	11	7 — 5	76
II child in family	22	8 — 10	72.9
I child in family	22	11 — 11	60

The number of cases in each category is too small to make any generalisation, but the trend of high negative correlation is clear enough. Besides he found the correlation of .715, ± .054 between the mental and educational ratios. Both these findings suggest that intelligence test scores are influenced by school education. Gordon observes : " It was found that a lack of schooling had had a most marked effect not only on their scholastic attainments but also on their 'intelligence' as measured by the mental tests used. In fact, it seemed evident that for children over six or seven years of age the mental tests were of little value for assessing natural ability apart from schooling, and, further, that the very simple scholastic tests in the speed of reading, adding and subtracting gave results that correlated very closely with those obtained for such children by the mental tests. It appeared that without the mental effort or mental exercises associated with schooling there had been very little mental development on the intellectual side, if the mental tests measure development." [21]

Gordon made a similar study of gipsy children. Gipsies live a nomadic life but they have much more social intercourse than Canal Boat children. Their average school attendance was about 35 per cent, better than Canal Boat children (4 to 5 per cent). The average I.Q. of 82 gipsies was found to be 74.5, which, though very low, was higher than that of Canal Boat children (69.6) The correlation between the I.Q. and age was found to be negative i.e. (—) .430, but it was not so high as obtained in the case of Canal Boat children. From both these studies Gordon concluded " that mental tests used do not measure native ability apart from schooling except in the cases of very young children ".[22]

Asher made a similar study on Kentucky Mountain children in America.[23] The East Kentucky mountaineers live in an extremely

20. *Ibid.*: Adapted from Table XII on p. 39.
21. *Ibid.*, p. 46.
22. *Ibid.*, p. 59.
23. *E. J. Asher*: "The Inadequacy of Current Intelligence Tests for Testing Kentucky Mountain Children", Journal of Genetic Psychology, 46, 1935.

isolated place and they belong to extreme lower cultural and economic social strata. He administered four standard intelligence tests—The Myers Mental Test, The National Intelligence Test, Stanford Revision of Binet-Simon scale and Herring Revision of Binet. Like Gordon, he analyses his data in terms of age and observes that there is a steady fall in I.Q. with continued residence in non-stimulating environment as shown below in the Table :

TABLE NO. III

Relation between Age and I.Q. of Kentucky Mountain children

Age	N	Mean I.Q.
7	25	84
8	29	76
9	47	74
10	51	69
11	49	67
12	52	64
13	43	63
14	28	63
15	15	60

These studies of Gordon and Asher give us a clear indication how I.Q. may be depressed by continued residence in environments offering poor cultural and educational opportunities. An interesting contrast to the results obtained by Gordon and Asher is that of O. Klineberg : " Negro Intelligence and Selective Migration " He finds that with continued residence in better environment there is a steady rise in I.Q. He obtained a large sample of negro boys who were alike in chronological age but differed in length of residence in New York city, all having migrated from the South. He finds that those who lived in New York less than one year obtain a mean I.Q. of 81 and that there is a steady rise with length of residence upto 88.5 at a three to four year residence, with little change thereafter.

Intelligence of siblings offered another approach to the study of the relationship between environment and intelligence test scores. Correlation of intelligence between siblings was approximately found to be + .50. This correlation may either be due to blood relationship or to common environment or due to both. Freeman, Holzinger and Mitchell [24] (" The Influence of Environment upon Intelligence, School Achievement and Conduct of Foster Children ") attempted to discover if common environment was one of the variables which entered into determination of the observed correlation. They tried to find if the correlation between the intelligence of siblings was affected if ' common

24. See *V. M. Sims*: " The Influence of Blood Relationship and Common Environment on Measured Intelligence ", Journal of Educational Psychology, 22, 1931, pp. 56-65.

environment' was absent. One hundred and twenty-six pairs of siblings were found who were separated before either child was six years of age. Their average age at the time of separation was five years and four months and they were separated for an average period of seven years and four months. Thus after the age of nearly about six years, all the hundred and twenty-five pairs of siblings were separated and were in different environments for over seven years. The correlation of .32 ± .05 (by age pairing) or .25 ± .06 (by double entry pairing) was found between the intelligence of these pairs of siblings as against the usual correlation of .50. This difference in correlation can be explained by environmental influence on intelligence measured. It may, however, be mentioned that these siblings were subjected to common environment for a period more than five years—the most significant period of their life—otherwise this correlation would have been still lower. This investigation gives a rather convincing evidence of environmental influence on intelligence measured.

An interesting technique was employed by Sims to the study of relative influence of blood relationship and common environment on intelligence. He compared the correlation between intelligence of pairs of siblings from the same homes with the correlation between pairs of unrelated pairs being equated with the sibling pairs on the basis of age, school attended and home background. Presumably children paired at random would show no resemblance, but one cannot compare paired siblings with random pairs and interpret the differences as due to inheritance. If, however, the environmental influences are equal, then the difference could be attributed to inheritance. Sims equated two sets of paired children on the basis of environment, the members of each pair in one set having the same parents while in the other set the members of pairs having different parents. He used the Otis self-administering test of Mental Ability for measuring intelligence and Sims' score-card for socio-economic status for measuring home background. The following table gives the correlations he found between the I.Q.s of siblings and the correlation between the I.Q.s of unrelated pairs :—

TABLE NO. IV

Correlation between the I.Q.s of Siblings and between the I.Q.s of unrelated pairs

	N	Correlation (age pairing)	Correlation (double entry)
Sibling	203	.44 ± .04	.40 ± .04
Unrelated	203	.35 ± .04	.29 ± .04

Partial correlation with age constant was found to be .48 for sibling pairs and .34 for unrelated pairs (by age pairing method). It may be mentioned that the siblings have been reared in the same home while the

unrelated pairs were reared in different homes assumed to be alike because they had the same score on the score card and to that extent the correlation between intelligence of unrelated pairs must have been affected. Sims, summing up his results, says that " it seems safe to say that the common environment to which the siblings are subjected accounts for a correlation between their I.Q.s of at least .30, while blood relationship is potent enough to raise the coefficient to .45", and concludes that this result " may be interpreted as a condemnation of present-day 'intelligence' tests or as evidence that intelligence is not solely inherited, but rather a development due to the interplay of environmental forces on hereditary characteristics. The interpretation that one may give is a personal matter, but the indications are that intelligence, so far as we are able to measure it, is greatly influenced by environment ".[25]

A comparison between identical twins reared together and reared apart provides yet another interesting field for investigating the relative contribution of heredity and environment to intelligence. It is common knowledge that identical twins closely resemble each other in intellectual as well as physical characteristics and the correlation coefficient found is over .9. Freeman, Holzinger and Newman [26] attempted to discover the contribution of environment to this high correlation. They collected data for fifty pairs of fraternal twins and fifty pairs of identical twins reared together, and nineteen pairs of identical twins reared separately since shortly after birth. They employed the Stanford-Binet and Otis tests to measure their intelligence. The following table gives the correlations found between different twin pairs : —

TABLE NO. V

Correlation between Three Groups of Twin Pairs

	Identical twins Reared together N = 50	Fraternal twins Reared together N = 50	Identical twins Reared separately N = 19
Stanford—Binet I.Q.	.910	.640	.670
Otis I.Q.	.922	.621	.727

These results are in conformity with the findings of previous investigators. From all these studies it is clearly evident that intelligence as measured by intelligence tests is greatly influenced by environment.

In all the studies referred above, verbal intelligence tests were employed and, therefore, their findings may not be applicable to non-verbal intelligence tests. As it is generally assumed that non-verbal intelligence tests are free from the influences of education and environ-

25. *Ibid.*, 22, 1931, pp. 56-65.
26. Freeman, F. N., Holzinger, K. J., and Newman, H.H.: " Twins: A Study of Heredity and Environment ", University of Chicago Press, 1937.

ment, it is interesting to note Miss Smith's experience in administering Cattell's non-verbal intelligence test to Hebridean children.[27] The island of Lewis is one of the largest of the western group and owes its general character to its insularity. Miss Smith thus narrates " a few of the children's specific difficulties " in responding to pictorial test situations : " It seems unlikely that the ability to interpret pictures and to respond with meanings is so well developed in the island children as in most others. They find little stimulation of their powers of pictorial appreciation outside their school experience—that is to say, in school text-books and in wall pictures. It is making a heavy demand on a child who is practically picture-starved to read meaning into unfamiliar pictures. . .
" Many of the objects represented in the pictures throughout the test booklet bore no reference to past experience in the life of Lewis children. There are items about trains, for instance, and these demand precise knowledge of their structure and function. Now, the average child in Lewis has never seen nor heard a train. He may have read something of trains, but his experience is at best indirect. One problem on trains, for instance, in the picture-completion test demanded the accurate recall of the arrival of a railway train at a station. The correct insets for the blanks, pictures of the engine and a middle coach, had to be selected from an array of four pictures. Having deduced from the relative positions of train and platform the direction in which the train was travelling, the child was required to select, from the pictures of the two engines which did face the correct direction, that one which, judged by the volume of smoke emitted, appeared to be stationary. There is little hope of any correct solution to that problem—except by pure chance—from the average, or even from the very intelligent child in rural Lewis." Miss Smith also cites many other test items which did not bear any reference to past experience of Lewis children.

4. *Determination of Experiential Background* : All these studies point to one conclusion : that intelligence test scores are influenced by the experiential background of the individual child is an undeniable fact. The degree to which they are influenced may, however, be a matter of personal opinion. Sandiford, for example, thinks that " although environment may increase or decrease intelligence as measured by intelligence tests by as much as twenty points, the contribution of heredity is about four times as potent as that of home environment ",[28] while to others the relative contribution of heredity and environment is more nearly equal. The experiential background is bound to differ from individual to individual and to that extent scores obtained on intelligence tests are not accurate measures of innate intelligence. Environment is a wide term and even within the same environment two individuals would not necessarily have the same experiences. For example, in certain families, boys are shown greater latitude as regards outdoor activities, going to pictures, etc. than girls, and, there-

---

27. *Smith C. A.* : "Mental Testing of Hebridean Children in Gaelic and English ", Scottish Council for Research in Education, Report 27, University of London Press, 1948.
28. *P. Sandiford* : Foundations of Educational Psychology, p. 95.

fore, in spite of the fact that they are brought up in the same environment, their experiences are not identical. In order to be exact in our terminology, we prefer to use the term "experiential background" rather than "environment". In designing intelligence tests, we have to take into account the differential experiential background of the individual child. One approach would be to develop a test which is absolutely free from the influences either of cultural or social experiences. We have seen that the task of creating such test items is an impossible one. Mention, however, must be made of Raven's attempt to develop such a test—Progressive Matrices.[29] Progressive Matrices are made up of graded series of tests presenting different patterns of drawings involving the relationships of similarity, opposition, addition, subtraction, etc. The person who is tested has to select the figure bearing correct design, so that the analogy between the designs is completed. In fairness to Raven, it must be admitted that this test is largely free from educational or other everyday experiential influences. We are, however, of the opinion that urban children, particularly those who have had good nursery school education and have developed a sense of appreciation of finding meaning in such patterns, are better adapted to respond to such types of tests and would score better than other children. This is a matter which can be settled by research alone. To our mind, it appears impossible to design "culture-free" intelligence tests. The factor of experience does enter into all intellectual operations and, therefore, it contributes to some extent to the general score on intelligence tests. If it were possible for every single individual to have the same opportunity, encouragement and stimulation to acquire education and information, then the experiential background of every individual would remain practically the same and then only would the score on intelligence tests represent a fairly accurate measure of individual ability. The test designer assumes that the factor of experiential background which operates in the solution of test problems is the same for all children. The use of heterogeneous test problems is justifiable on the assumption that range of intelligence is closely related to level of intelligence. The more intelligent individual is not only capable of performing a difficult intellectual task in any one field but he displays this capacity in many more fields. This may be partially true; but it is not the whole truth. Thorndike found that "width of intellect" correlated with level of intellect around 90'. Whether this high concomittance is due to intelligence alone or some other factors were operating, we do not know. But it seems likely that there is a contribution from many other factors besides intelligence. Sandiford says, "Differences of training, of opportunities for learning, of experience and of native equipment all enter into the picture and cause people to fail in some tasks of difficulty level representing their general level".[30] Bagley goes a step further and contends that horizontal growth (due to education) may bring about a significant access of vertical growth (native intelligence). Even if we do not share Bagley's great expectations, it will be generally accepted that the range of intelli-

29. *J. C. Raven*: Progressive Matrices, H. K. Lewis & Co., London, 1938.
30. *P. Sandiford*: Foundations of Educational Psychology, p. 348.

gence does not depend on native ability alone. In our attempts to measure native intelligence, therefore, we cannot assume interdependence of *range* and *level* of intelligence. On the other hand, we must ensure that the content of the test items is within the experience of the individual child and then only would we be justified in considering that we are measuring the individual's native intelligence. However we may try, the content of the test items of any *single test* is bound to be unfamiliar to a certain number of individuals. We, therefore, suggest that attempts should be made to build up a test around some experience or activity and to standardise it on those children who are familiar with this activity rather than standardising it on any random sample of population. Within the range of this activity, we would expect to find individuals widely distributed as regards their mental abilities. A number of such tests may be built up around different activities and they may be standardised in a similar way on a population which is familiar with the experiences associated with it and it would be possible to find out norms.

How to compare scores on different tests—that is another important problem. If one individual child scores 100 on one test and another scores 100 on another test, are we to consider that they are equally intelligent ? It may be possible that some activities are favourites with most intelligent children while some others are with duller children. We could not, therefore, be justified in considering norms obtained on different tests as equivalent. However, we would expect to find every individual familiar with more than one activity. Presumably our tests are measures of native intelligence. Any individual's score on two different tests, though possibly different, would represent his intelligence and, therefore, they are equivalent. If we compare the scores of one group on two different tests and if both of these tests measure native ability as we presume, we would expect to find a very high correlation between these two tests and this correlation will be one of the criteria to determine the validity of different tests. On the basis of these results it would be possible to equate scores on different tests by giving suitable weightage. We may need to find out a suitable statistical device.

It might be mentioned that correlation technique is invariably employed in standardising present intelligence tests and we might be charged that we are falling into the same error. We would, however, point out that we would be able to control one variable—experiential background of the individual child—which the tests designers are ignoring. We anticipate difficulties in creating a sufficiently large number of test items within any single activity and, therefore, it would be inadvisable to determine the individual level of intelligence on the basis of the score obtained on any one single test. A composite score on a number of tests representing different activities—number to be fixed arbitrarily —would probably give a fair estimate of individual intelligence. Experience would suggest the number of tests to be included in the battery.

At this point we have to break new ground. In order to design an experiment to test the effect of experiential background some theoretical reasoning is needed concerning the way in which that background

operates and the method by which its incidence may be assessed. For experience is not, as a rule, a matter of all or none, but of more or less. There are also different degrees of directness of experience. The following is an account of the preliminary theoretical reasoning on which tests described later were based. Its argument is, therefore, of crucial importance in the thesis.

(a) The first task would be *to find out ways and means by which we can objectively determine the familiarity of the individual child with a particular activity.* We cannot give great weight when an individual child says that he knows a particular activity. If we consider an activity like Fishing we might find two children saying that they know this activity. It is probable that one of them might have only heard about it and the other has seen it done by others. The degree of familiarity in both cases is not the same and it would be unfair to treat both children —one who has only seen and the other who has only heard about it—as having the same degree of familiarity. We suggest a technique by which we think we are able to get the individual's degree of familiarity with a particular activity. We consider that the familiarity of the individual with a particular activity as being greatest when the individual has taken part in such an activity personally or done it himself. When the individual does the activity himself we would expect him to know minute details about it. This insight would also depend on his ability. The next in order will be the familiarity of the individual who has seen it done by others. This individual would be able to get a reasonable insight into the activity but not to the same extent as one who has done it himself. The lower degrees of familiarity in order were considered of those who have seen it only on the films or those who have only heard about it and the lowest of those who have never even heard about it. Information was obtained on this five-point scale—Done, Seen, Cinema, Heard, Unknown—from each child for every single activity.

The insight into any activity, as we have stated, does depend on the individual's degree of familiarity with it. It also depends on the individual's likes and dislikes about it. Sometimes a particular activity might have been forced on certain individuals through sheer circumstances. Although he has first-hand contact with the activity he would not try to find out more about it than what is absolutely necessary for the performance of his task. On the other hand, if one is interested in a particular activity he will try to know more and more about it and would get deeper insight into it. There is also a third class who might have developed definite dislikes for particular activities. Children's responses were obtained on this score and were asked to state whether they like or are interested in a particular activity, or whether they dislike it or whether they have no special opinion as such.

(b) *Selection of activities* : The principle followed in selection of activities is that they should cover as wide a range as possible and at the same time they should reasonably be within the experience of an average child. Attention was specially given to select activities from household duties, games, hobbies, social activities, school activities and outdoor

activities. The total number of activities selected was 74. We realise that the list could have been extended so as to include activities in which rural children are specially familiar. We hope to continue this work when we shall be able to give more serious consideration for the selection of the activities and would be able to extend the list so as to include as wide a sampling of experiences as possible. The text of the actual test administered is reproduced below :—

Fill in the following:

NAME: ....BOY or GIRL:

AGE LAST BIRTHDAY: ....DATE OF BIRTH:

SCHOOL:

STANDARD or CLASS: ....TODAY'S DATE:

Below is a list of things which people *do*. Perhaps you have *done* some of these, or only *seen them* done, or only seen them at the *cinema*, or only *heard* of them.

Opposite each are written five words:

DONE, SEEN, CINEMA, HEARD, UNKNOWN.

If you have *done* it, *underline* the word Done.
If you have only *seen* it but not done it, *underline* Seen.
If you have seen it only at the *cinema*, *underline* Cinema.
If you have only *heard* of it, *underline* Heard.
If you have *never heard* of it, *underline* Unknown.

EXAMPLES

Fishing: *Done*, Seen, Cinema, Heard, Unknown
One boy underlined Done because he himself had fished.
Fishing: Done, *Seen*, Cinema, Heard, Unknown
The second boy underlined Seen because he had never fished, but had seen it done by others.
Fishing: Done, Seen, *Cinema*, Heard, Unknown
The third boy underlined Cinema, for he had only seen it done at the Cinema.
Fishing: Done, Seen, Cinema, *Heard*, Unknown
The fourth boy underlined Heard, because he had only heard of it.
Fishing: Done, Seen, Cinema, Heard, *Unknown*
The fifth boy underlined Unknown, because he had never even heard of it.

Underline only one word in each line:

1.	Cooking:	Done,	Seen,	Cinema,	Heard,	Unknown
2.	Housework:	Done,	Seen,	Cinema,	Heard,	Unknown
3.	Dressing:	Done,	Seen,	Cinema,	Heard,	Unknown
4.	Shopping:	Done,	Seen,	Cinema,	Heard,	Unknown
5.	Eating:	Done,	Seen,	Cinema,	Heard,	Unknown
6.	Looking after children:	Done,	Seen,	Cinema,	Heard,	Unknown
7.	Knitting:	Done,	Seen,	Cinema,	Heard,	Unknown
8.	Sewing:	Done,	Seen,	Cinema,	Heard,	Unknown
9.	Telephoning:	Done,	Seen,	Cinema,	Heard,	Unknown
10.	Writing letters:	Done,	Seen,	Cinema,	Heard,	Unknown
11.	Looking after animals:	Done,	Seen,	Cinema,	Heard,	Unknown
12.	Picking fruit or vegetables:	Done,	Seen,	Cinema,	Heard,	Unknown
13.	Gardening:	Done,	Seen,	Cinema,	Heard,	Unknown

14. Farming:	Done,	Seen,	Cinema,	Heard,	Unknown
15. Climbing (trees)	Done,	Seen,	Cinema,	Heard,	Unknown
16. Poultry Keeping:	Done,	Seen,	Cinema,	Heard,	Unknown
17. Fishing:	Done,	Seen,	Cinema,	Heard,	Unknown
18. Birds-nesting:	Done,	Seen,	Cinema,	Heard,	Unknown
19. Swinging:	Done,	Seen,	Cinema,	Heard,	Unknown
20. Skating:	Done,	Seen,	Cinema,	Heard,	Unknown
21. Boxing:	Done,	Seen,	Cinema,	Heard,	Unknown
22. Wrestling:	Done,	Seen,	Cinema,	Heard,	Unknown
23. Fencing:	Done,	Seen,	Cinema,	Heard,	Unknown
24. Skipping:	Done,	Seen,	Cinema,	Heard,	Unknown
25. Tracking:	Done,	Seen,	Cinema,	Heard,	Unknown
26. Playing cricket:	Done,	Seen,	Cinema,	Heard,	Unknown
27. Playing football:	Done,	Seen,	Cinema,	Heard,	Unknown
28. Playing Rugby:	Done,	Seen,	Cinema,	Heard,	Unknown
29. Playing Table Tennis:	Done,	Seen,	Cinema,	Heard,	Unknown
30. Playing hockey:	Done,	Seen,	Cinema,	Heard,	Unknown
31. Playing tennis:	Done,	Seen,	Cinema,	Heard,	Unknown
32. Playing badminton:	Done,	Seen,	Cinema,	Heard,	Unknown
33. Playing netball:	Done,	Seen,	Cinema,	Heard,	Unknown
34. Playing marbles:	Done,	Seen,	Cinema,	Heard,	Unknown
35. Playing hopscotch:	Done,	Seen,	Cinema,	Heard,	Unknown
36. Playing top:	Done,	Seen,	Cinema,	Heard,	Unknown
37. Potholing:	Done,	Seen,	Cinema,	Heard,	Unknown
38. Riding:	Done,	Seen,	Cinema,	Heard,	Unknown
39. Boating:	Done,	Seen,	Cinema,	Heard,	Unknown
40. Mountaineering:	Done,	Seen,	Cinema,	Heard,	Unknown
41. Hiking:	Done,	Seen,	Cinema,	Heard,	Unknown
42. Scouting or Guiding:	Done,	Seen,	Cinema,	Heard,	Unknown
43. Camping:	Done,	Seen,	Cinema,	Heard,	Unknown
44. Cycling:	Done,	Seen,	Cinema,	Heard,	Unknown
45. Going by tram:	Done,	Seen,	Cinema,	Heard,	Unknown
46. Going by bus:	Done,	Seen,	Cinema,	Heard,	Unknown
47. Going by motor:	Done,	Seen,	Cinema,	Heard,	Unknown
48. Going by train:	Done,	Seen,	Cinema,	Heard,	Unknown
49. Going by ship:	Done,	Seen,	Cinema,	Heard,	Unknown
50. Going by cart:	Done,	Seen,	Cinema,	Heard,	Unknown
51. Flying (aeroplane)	Done,	Seen,	Cinema,	Heard,	Unknown
52. Writing:	Done,	Seen,	Cinema,	Heard,	Unknown
53. Drawing:	Done,	Seen,	Cinema,	Heard,	Unknown
54. Painting:	Done,	Seen,	Cinema,	Heard,	Unknown
55. Metal work:	Done,	Seen,	Cinema,	Heard,	Unknown
56. Model work:	Done,	Seen,	Cinema,	Heard,	Unknown
57. Laboratory work:	Done,	Seen,	Cinema,	Heard,	Unknown
58. Doing P.T. or Drill:	Done,	Seen,	Cinema,	Heard,	Unknown
59. Singing:	Done,	Seen,	Cinema,	Heard,	Unknown
60. Dancing:	Done,	Seen,	Cinema,	Heard,	Unknown
61. Piano Playing:	Done,	Seen,	Cinema,	Heard,	Unknown
62. Acting:	Done,	Seen,	Cinema,	Heard,	Unknown
63. Puppet making:	Done,	Seen,	Cinema,	Heard,	Unknown
64. Talking to friends:	Done,	Seen,	Cinema,	Heard,	Unknown
65. Going to a concert:	Done,	Seen,	Cinema,	Heard,	Unknown
66. Newspaper reading:	Done,	Seen,	Cinema,	Heard,	Unknown
67. Radio listening:	Done,	Seen,	Cinema,	Heard,	Unknown

68. Cinema going:	Done,	Seen,	Cinema,	Heard,	Unknown
69. Photography:	Done,	Seen,	Cinema,	Heard,	Unknown
70. Horse racing:	Done,	Seen,	Cinema,	Heard,	Unknown
71. Dog racing:	Done,	Seen,	Cinema,	Heard,	Unknown
72. Cycle racing:	Done,	Seen,	Cinema,	Heard,	Unknown
73. Motor racing:	Done,	Seen,	Cinema,	Heard,	Unknown
74. Football Pools:	Done,	Seen,	Cinema,	Heard,	Unknown

Two schools in Leeds were selected for this investigation—one grammar school (Cockburn High School) and one modern school (Brudenell Secondary Modern School). The test was administered to four streams of Form II in the grammar school and to four streams of Form II in the modern school. In all the classes standard instructions were given so as to avoid any misunderstanding. The text of the instructions is reproduced below:—

As you have heard from Mr. Sutcliffe (Head Master) you are going to have a sort of test to help us with some work we are doing in the University. Now this is *not* an examination and your papers will not be given any marks.

When I give these papers out, you will find at the top some blank spaces for your name, school, class, age and so on. Fill in these in the usual way, then put your pencils down and fold your arms.

GIVE OUT	Now read your papers while I go over the instructions.
READ	Examples.
	Now let us do an example on the board.
WRITE	"Rowing a boat".
	Hands up those who have actually rowed a boat themselves. Good. All of you would underline the word *done*. Hands down. Hands up those who have never done it themselves but have watched someone else do it.
SEEN	Good. You would all underline *seen*. Hands down.
CINEMA	Hands up those who have never done it, seen it done, but have seen it at the cinema. Good. You would all underline *Cinema*. Hands down. Hands up those who have never done it, seen it done, even at the Cinema but who have heard or read about it. Good. You
HEARD	would underline *Heard*.
	Hands up those who have never heard of it. Good. If there were any you would have underlined *Unknown*.
	Now let's try a different one.
	Hands up those who have done potholing.
	Good. So none of you will underline *Done*.
	Hands up those who have not done but seen it done by others. Good. So none of you will underline *Seen*.
	Hands up those who have seen it on the cinema. Good. So none of you will underline *Cinema*.
	Hands up those who have heard of it somewhere or read about it. Yes, you will underline *Heard*. Hands down.
	Hands up those who have never even heard of it. Right. You will underline *Unknown*.
	Now all the questions are like that. Which end of row do we try first? Yes, the left-hand end. How many words do we underline in each row? Yes, only one.
	Any questions? When you have completed all 74 fold your arms. Attempt *all* questions. Now go ahead.

After having ascertained that all children have attempted all items, the following test was administered so as to get their responses as regards their attitudes to these activities.

" I want you to show on your papers which of these things or activities you *like*, which you *dislike* and for which you have *no opinion or feeling* one way or the other.

If it is something you definitely LIKE	Write L in the space provided.
If it is something you DISLIKE	Write D in the space provided.
If it is something about which you have No opinion or feeling one way or the other	Write N in the space provided.

The results were computed for grammar school children only and they are detailed in the table below : —

TABLE NO. VI

Statement Showing the Degree of Familiarity of 116 Children with 74 Different Activities and their Preferences

(N.o.A. = No. of Activity. L = Like. N = No opinion. D = Dislike. T = Total.)

N. o. A	DONE				SEEN				CINEMA				HEARD				UN-KNOWN
	L	N	D	T	L	N	D	T	L	N	D	T	L	N	D	T	
1.	91	5	...	96	4	14	2	20				...					
2.	56	21	29	106	1	5	4	10	...			...					
3.	57	28	31	116				...	...		...					...	
4.	58	19	39	116			...	...									
5.	111	5	...	116	...	...	...	...		...		...		...	...	...	
6.	53	13	25	91	1	13	6	20		2		2		2	1	3	
7	45	12	23	80	1	23	12	36					...				
8.	50	23	19	92	2	15	7	24		...		...	...				
9.	76	12	3	91	8	15	1	24		1		1			...		
10.	59	15	42	116	...	...	...	...	...	...		...		...	...	...	
11.	90	5	1	96	9	7	1	17	...	1	...	1		2		2	
12.	67	11	7	85	7	10	2	19	3	7	1	11	...				
13.	87	7	13	107	3	5	1	9	...	...		–	...	...		...	
14.	16	...	1	17	27	48	1	76	7	13	...	20	1	2	...	3	
15.	70	8	8	86	4	12	12	28	...	1	1	2	...	...	...	...	
16.	14	5	4	23	20	41	8	69	2	11	1	14	2	6	2	10	
17.	54	5	2	61	12	32	4	48	2	2	1	5	1	1	...	2	
18.	19	3	6	28	5	18	33	56	3	3	6	12		7	13	20	
19.	90	17	5	112	2	...	2	4	...	...		...		...		...	
20.	58	7	2	67	15	18	1	34	4	10	...	14		1	...	1	
21.	42	7	2	51	11	15	5	31	7	12	12	31		...	3	3	
22.	29	7	5	40	7	10	11	28	5	16	14	35	..	2	10	12	...
23.	4	1	...	5	9	4	3	16	28	41	12	81	2	8	3	13	1
24.	73	26	11	110	...	3	3	6	...	...		...	...	...		...	
25.	75	3	2	80	3	8	...	11	3	7		10	5	10		15	
26.	96	1	6	103	6	6	1	13	...	...	...	...					
27.	77	3	6	86	5	15	8	28	1	1	...	2			...	...	
28.	40	8	10	58	8	25	16	49	1	4	2	7	...		2	2	
29.	97	5	5	107	4	3		7		3		3	2			2	

N. o.	DONE				SEEN				CINEMA				HEARD				UN-KNOWN
A	L	N	D	T	L	N	D	T	L	N	D	T	L	N	D	T	
30.	45	3	5	53	6	40	10	56	1	4	...	5		1	1	2	
31.	62	2		64	16	30	4	50	...	2	...	2	...	...	...	...	...
32.	5	...	...	5	10	32	3	45	2	25		27	3	28	1	32	7
33.	60	6	1	67	9	33	7	49					...	...	...		...
34.	55	23	10	88	1	18	9	28			...	...		...		...	...
35.	47	26	20	93	14	6		20		...				1		1	2
36.	44	35	25	106	5	5		10	...	...	...	...	...	...	...	...	2
37.	1	...	...	1	1	4	...	5	17	29	2	48	5	28	2	35	17
38.	42	1	1	44	30	21	1	52	5	11		16	3	1		4	
39.	100	2	...	102	7	4	2	13	1	...	...	1		...		...	
40.	91	2	2	95	4	8	2	14	2•	1	1	4	...	3	...	3	
41.	12	2	...	14	4	2	2	8	28	54	4	86	1	6	1	2	
42.	45	6	2	53	10	29	5	44	...	4		4	2	13	...	15	
43.	38	...	1	39	32	25	2	59		4		4	8	5	1	16	
44.	86	3	...	89	10	15	1	26				...	1			1	
45.	55	41	20	116							...						
46.	76	28	12	116			...	...									
47.	104	10	1	115	...		1	1	...					...			
48.	100	8	7	115	1	...	...	1	...	...	...	...	...	...		...	
49.	49	1	4	54	8	10	1	19	20	18	2	40	2	1	...	3	
50.	31	8	10	49	10	40	7	57	’1	6	...	7	...	2	1	3	
51.	6	...	...	6	38	38	4	80	10	18	1	29	1			1	
52.	56	29	31	116	...										...	...	
53.	94	7	14	115				...			...				1	1	
54.	83	10	22	115	...	...	...	...	...	...	...	..	...	...	1	1	
55.	7	...	2	9	13	28	4	45	1	29	4	34	5	20	3	28	
56.	61	4	2	67	7	17	2	26	3	16	...	19		4		4	
57.	74	18	15	107		6	1	7				...		2		2	
58.	112	4	...	116													
59.	89	15	12	116	...	...	...	...			...	...	...				
60.	73	14	15	102	1	5	6	12			2	2	...		...	...	
61.	43	2	15	60	13	32	5	50		...	...	...	1		2	3	
62.	85	7	3	95	3	15	1	19	...	1	1	2		...		...	...
63.	25	9	2	36	7	35	2	44	4	15		19		16		16	1
64.	109	7	...	116	...			...									
65.	96	11	8	115	1	...		1									
66.	100	15		115		1		1				...				...	
67.	113	3	...	116			...	...				...					
68.	97	13	4	114	..	...	2	2		...		...	...	...		...	...
69.	61	1		62	17	32	...	49	1	1	...	2	1	1	...	2	1
70.		...		...	16	11	4	31	18	44	19	81	...	1	2	3	1
71.	...	1		1	10	9	7	26	8	35	26	69	2	10	9	21	1
72.	9	...		9	49	14	3	66	17	17	2	36	1	3	1	5	
73.	...	...	...	...	16	4	4	24	41	36	7	84	2	6	...	8	
74.	21	10	1	32	6	39	15	60			1	1		10	11	21	

This small investigation reveals that there is a considerable number of children who had never participated in many of the activities. This finding is important because most of the activities were selected from the average child's experiences. We were rather surprised to find two children who had never been to the cinema. Through curiosity we questioned one of them—a girl—who replied, almost in tears, that she had never been to the pictures. The test designers make use of many of these activities, either directly or indirectly, in their intelligence tests. Some

children will be handicapped in responding to such test items through sheer lack of experience.

From this investigation, we are more convinced of the necessity of developing tests around certain activities and standardising them on those children only who are familiar with them, and extending the range of activities to cover the backgrounds of all children to whom the test is likely to be applied.

5. *Establishment of the Test Vocabulary*: We thus decided to build up tests around different activities. The precise reasoning for adopting such a procedure, as stated before, is to ensure that the content of test items is familiar to the individual child. The problem is how to devise such tests. What material shall we employ in such tests ? We have no means of determining whether the content of test items is within the experience of the individual child. Will the children themselves provide us with the necessary material ? If we could build up tests on the material supplied by children we would be sure of their familiarity with such material. How shall we be able to get such material from the individual child ? If we could get the individual child to write as many words as he knows connected with a particular activity we might be able to devise tests based on such material. The hypothesis here is that the greater the familiarity of the individual child with a particular activity the better will be the vocabulary supplied by such a child. The quality and number of words supplied by the individual child would also depend on his capacity. We have, therefore, to devise a test which would enable us to get an individual child's vocabulary connected with a particular activity. If we simply ask a child to write as many words as possible connected with a particular activity, such a list of words would not serve our purpose. It is very likely that children would give association words which would have no direct bearing on the activity. We must adopt such a technique which would enable us to restrict the individual child's vocabulary to the activity concerned and at the same time to get all possible words connected with the activity. If we analyse *any* activity we find that we could divide it into three component parts : (1) tools or things used, (2) people taking part, and (3) actions or results. If we take a simple activity such as " lighting a cigarette " we find that we could divide it into three component parts. The things or tools used in this activity would be matchbox, match-stick, cigarette, etc. " People taking part " is a single individual " smoker " as this is an individual activity. If this activity were an occupation we would find special names assigned to them such as butcher, baker, carpenter, etc. When any activity is done by many individuals collectively, different individuals play different roles in the activity and they get their names according to the roles they play such as driver, guard, ticket collector, passenger, etc., in an activity like " going by train ". In lighting a cigarette the actions would be " striking a match ", " light the cigarette ", etc., and the result would be " fire ".

We thought of giving such a directive to children so that we could get their responses pertaining to this classification. Our whole object in

doing this was to restrict the child's vocabulary to the activity concerned. The actual test administered will be reproduced later.

(a) *Selection of activities* : As our investigation was more of exploratory nature, we decided to include 30 activities in our investigation. This investigation needs a team of reasearch workers and those who would take up our work after us would extend this to a great variety of activities so as to make provision for every possible experiential background. However, the following considerations were given in selecting these 30 activities (i) activities which were capable of producing a larger vocabulary were included in the list; (ii) fair distribution was made among six different groups:—(1) games, (2) household activities, (3) rural activities, (4) out-door activities, (5) arts, and (6) school activities; and (iii) attention was given to include popular as well as less popular activities in the list.

Sheet A below is a copy of a test as it was administered to children. It gives a complete list of activities included in our investigation:—

SHEET A

NAME: CLASS:

Boxing	Cooking	Looking after pets
Cricket	Housework (not cooking)	Gardening
Hockey	Shopping	Farming
Association Football	Knitting	Poultry Keeping
Rugby Football	Sewing	Fishing
Scouting or Guiding	Dancing	Metal work
Cycling	Acting	Wood work
Motoring	Puppet-play making	Photography
Flying (aeroplane)	Going to a concert	Drawing or Painting
Camping	Piano Playing	Laboratory Work

The copy of the vocabulary test is reproduced below:—

Name of the Activity: Choice No.

Your Name: Class

1. Things used and what they are like

____

____

____

____

____

2. People taking part and what they are like

____

____

____

____

____

3. What the people do or get or make

____

____

____

____

____

____

____

4. Other words

____

____

____

____

The test was administered to the same children of form II in grammar and modern schools in Leeds. Four streams of each school were selected for the purpose. The assistance of class teachers was taken for administering the test and the teachers were given standard instructions which are reproduced below.

INSTRUCTIONS

1. Fill in your name and class on Sheet A.
2. You are given 30 different activities (games, hobbies, work, etc.) on this sheet. Go through the list carefully and underline all those *you have done yourself.*
3. Now go over those you have underlined and choose the FIVE which *you like best and which you know most about.* Number these 1, 2, 3, 4 and 5. Putting 1 for very best, 2 for the next and so on.
4. Now turn to the second sheet. Fill in your name and class.
5. Write the name of the (First) activity you have chosen in the space provided and No. 1 against choice No. 1.

6. Now think of as many words as possible *specially belonging to the activity you have chosen* and write them down in the way I will describe in a moment. You notice that there are four headings on your sheet: 1. Things used and what they are like. 2. People taking part and what they are like. 3. What the people do or get or make. 4. Other words. You are to write your words under these headings. Now watch me do an example on the board.

7. Supposing my activity was WRITING (B.B.). The first heading is: Things used and what they are like. What things do I use for writing? Pencil, Pen, Ink I write them down under this heading (B.B.). Now what *sort* of pencil could I use? Lead, propelling, coloured So I write these words down too. What *sort* of pen could I use? Fountain, ordinary, Biro So I write these words down too. And so on. Now if we look at some of the things you find they have different parts for example: Pen—Nib, holder. I write these words too under this heading. So if you think of the names of any *parts* of the things used you can put them down as well. So under this heading write down the things you use, what they are *like* and the names of any parts you can think of. Now go ahead and do this for your activity.

8. Now turn to the next heading, 2. People taking part and what they are like. Suppose my activity was CRICKET. What people take part in playing cricket? Batsman, Bowler, Umpire I write them down. What *sort* of batsman? Left-hand I write them down too. What *sort* of bowler? Fast, googlie . I write them down too. And so on. Under this heading I write the names of the people taking part as well as what they are like. Now do this for your activity. Do not write proper names (Bradman, Hutton, etc.) your activity may not give you words to write under this heading. (Stop when finished.)

9. Now the next heading: 3. What the people do or get or make. Now think of the words which tell you what people *do* in this activity. Suppose my activity was Carpentry. What do people do in Carpentry? Hammering, Sawing So I write these words down under this heading. What do they get in Carpentry, Saw-dust, shavings, etc. So I write these words too. What do people make in Carpentry? Chairs, tables, etc. I write these words too under this heading. So what you have to do is to write down all the words for your activity which tell you what people *do* or what people *get* or what people *make*. Before you start, hands up those who have chosen shopping as (first) choice. Now all of you will cross out *get* before you begin. We only want you to say what you *do* or what you *make* when shopping—but not the things you *get*.

10. *Other words*—Now write all other words which you think *specially belong* to this activity but could not be written under any of the other headings.

The ideal condition would be to consider the individual child's vocabulary pertaining to a particular activity and to build up tests out of this material for that child only. This is an impossible condition to fulfil as that would mean constructing as many tests as the number of children. In our attempts to devise tests, we have not considered the individual child's vocabulary separately but dealt with the vocabulary supplied by the group who have shown preferences for particular activities. When the individual children have acknowledged their familiarity with a particular activity and, moreover, have shown a preference for this activity, it is reasonable to assume that the differences in quality and the number of words supplied are due to differences in innate abilities.

We have given below the aggregate vocabulary for 30 different activities supplied by the total number of children who have shown preferences for those activities. The number in the bracket indicates the number of children who have supplied this vocabulary.

BOXING (26)

advantage, amateur, announcer, appeal, attack, audience, awards, back away, bandage, bantam weight, bell, bell ringer, belt, black eye, bleed, block, boo, boots, bottle, boys' men, boxer, bruises, buckets, camera-lights, canvas, cauliflower ears, caustic pencil, chairs, cheers, clinch, clinch-break, coach, commentary, corners, counter punch, cover up (right), cross, cuts, dance, defend, determination, dodge, dressing gown, dressing room, duck, fall, false teeth, fault, feather-weight, fight, fly-weight, foul, four-legged, gasp, glide, gloves (spurring), groan, gum shields, hangs, head-guards, heavy-weight, help, hit below the belt, hook, hurt, jersey (singlet), knockout, lead, leather (gloves), left upper cut, light heavy-weight, light-weight, lights, lineaments, managers, massage, metal gong, nerves, opponents, partners, punch-bag, platform, police, prize, professional, promoters, punch, referee, resin, ring, ringbell, ropes, rounds, seconds, shout, shorts (black), side-step, skipping ropes, slug murder, socks (ankle), square, speed, sponge, spunging, stamp, stools, straight left, straight punch, strength, strike, swing, thick ear, three legged, trunks, timekeeper, tired, title, towel, towel sand tray, trainers, upper cut, watch, water, water bottle, water sponge, win.

CRICKET (117)

appeal, ashes, autograph, back stumper, backward point, badges, bails, ball (cork, leather, hard), bat, batsman, batting, blind swiper, block, blocking, body line, boots (spiked), boundary, boundary line, bowl, bowled, bowler, bumper, byes, canvas (pads), caps (county), captain, catch, caught out, caught and bowled, century, 'Chinaman', chop, coin, cover drive, cover point, crease, cricket bag, cricketer, cross bat, deep extra cover, deep fine leg, defensive, drive, duck, edge, extras, extra cover, fast, fast medium, field, fielder, fine leg, first slip, flannel (white), forward defensive, fours, glance, glide, gloves (stumping, batting, leather), googly, grass, groundsmen, gully, handle, hat, hat-trick, hit, hook, innings, inswinger, late cut, l.b.w., left-handed, leg break, leg bye, leg slip, long off, long on, long stop, maiden, medium pace, mid-off, mid-on, mid-wicket, mower, nets, new ball, no-ball, not out, off break, off drive, offensive, on drive, out, out-fielder, out-swinger, oval, over, pace, pad, paddings, pavilion, pencil, pitch, point, points, practice, professional, pull, roller, rubber, runs, run out, score, scorer, score board, score card, second slip, selectors, short and deep extra cover, shin pad, short fine leg, short leg, short run, side board, sight screen, signal, silly mid-off, silly mid-on, singles, sixers, slash, slips, slogger, slow, slow medium, spectator, spin, spring (bat), square leg, steady, sticky, stand, strokes, stone-waller, stumps, stumper, stump out, sweater, sweep, swings, test-match, third man, throw, top spinner, toss, trousers, twelfth man, umpire, white wash, wicket, wickets, wicket keeper, wide, willow (bat), win.

HOCKEY (16)

attack, ball, boots, bully off, centre forward, centre half, corner, dribble, field, flags, foul, free hits, goal, goal keeper, goal keeper pads, goal posts, goalie, gloves, handle, left back, left half, left inner, left wing, mascot, net, off side, pass, pavilion, pitch, referee, right back, right half, right inner, right wing, roll, rules, scorer, score-book, shin-pad, shoes, shoot, side, sticks, swing, team, time-keeper, tackle, umpire, whistle.

ASSOCIATION FOOTBALL (78)

amateur, attack, bladder, book, boots, bounce, captain, centre circle, centre forward, centre half, centre line, centre spot, charge, championship, coach, coin, corner, corner flag, corner kick, cover, dead ball line, dive, dodge, dribble, enclosure, extra time, field, flags, football, final, foul, free kicks, full back, full time, goal, goal area, goalie, goal keeper, goal kick, goal line, goal posts, grass, grandstand, groundsmen, half-back, half-time, halfway line, halves, handle, head, inside left, inside right, jersey, jump, kick, kick off, laces, league, left back, left wing, lines, linesmen, manager, mower, nettings, off side, outside right, paddock, pass, pavilion, penalty, penalty area, penalty spot, pencil, pitch, points, professional, pinch, referee, reserve, right back, right half, right wing, roller, rules, saves, saw dust, score, score book, score board, semi-final, shin pads, shoot, shoulder, signals, slides, soccer, spectator, stockings, studs, swerve, tackle, team, team spirit, throw, touch kick, touch line, trainer, turf, volley, watch, whistle, white wash, white wash machine.

RUGBY FOOTBALL (35)

black eye, bladder, centre forward, coin, corner flag, corner kick, cloth, dead ball, dead line, doctor, dressing room, enclosure, force, fall back, goals, goal posts, ground, groundsmen, half-way line, hands, hand off, hook, huck, hucker, jersey, kick, left wing, linesmen, looseforward, notebook, pass, penalty, pencil, pitch, points, referee, reserve, right wing, roller, rules, second row, score, scrum, scrum half, selector, shin pads, shorts, shove, skip, skull caps, tackle, tries, watch, whistle, white wash, wooden posts.

COOKING (77)

almonds, apples, apron, bacon, bake, baker, baking board, baking powder, baking sheet, basin, beat, bicarbonate of soda, blades, biscuits, boil, bowls, bread, bread board, breakfast, broth, brush (pastry), buns, burn, butter, cabbage, cake, cake tins, cap (cookery), carrots, cauliflower, chair, cheese, chef, china, chop, chopping board, chocolate, cocoanut, coffee, cook, cooker, cookery book, cooking fat, cooling tray, cream, crockery, cup, cupboard, currants, custard powder, cut, cutlery, dinner, dishes, dish cloth, dough, earthenware, eggs, egg beater, egg whisk, electric oven, essence, fats, fire oven, fish, fish meat, flour (raising), fork, fry, frying pan, gas oven, gas stove, ginger, ginger flavour, glass, grater, gravy, grease, grease proof paper, grill, icing sugar, icing set, jam, jelly, jug, kettle, kettle holder, kitchen, knead, knife, ladel, lard, light, margarine, matches, mash, measure, meat, milk, mincer, mint, mix, mixture, mustard, nuts, onions, oven, oven tins, oven tray, pan, pancake, pan lid, pan stand, pastries, patty, peas, pears, peel, pepper, pickles, pies, pie dish, plates, plate-rack, pot, potato, potato peeler, potato masher, raisins, recipe, rind, roast, roaster, roll, rolling pin, salad, salt, sandwich, saucer, saucepan, sausage, scales, scissors, scones, scrape, scrub, seasonings, sieve, simmer, sink, slice, snack, soup, spices, spoon, steam, stew, stir, stools, stove, strain, sugar (granulated, brown), supper, syrup, sweets, table, table cloth, tap, tarts, tea, tea towel, treacle, tin, tin opener, toast, toasting fork, toffee, tomatoes, trays, trifles, utensils, vegetables, vinegar, wash, water, weigh, whip.

HOUSEWORK (29)

apron, black lead, brush, bucket, carpet beater, clean, cotton, dirt, dishcloth, dust, dust bin, dust cap, duster, floor cloth, floor polish, hot water, map, paraffin, polish, scrub, shake, shovel, soap, soap powder, soap water, sweep, tidy up, vacuum cleaner, vim, wash.

SHOPPING (26)

bag, baker, bargain, basket, boxes, butcher, buy, carry, china, chocolate, collect, count, counter, customer, draper, fishmonger, food, fruitshop, goods grocer, green grocer, hand bag, market, meat, money, newsagent, notebook, outfitter, paper bag, pay, penny, purchase, purse, queue, ration book, saleswoman, scales, sell, serve, shilling, shirts, shop, shop assistant, shop keeper, shopping list, silver, spend, stall, stocking, sweets, talk, tie, tins, toys, weigh, window wool, wrap.

KNITTING (22)

bone, bonnet, buttons, cardigan, cast (off), count, covers, crochet, four ply (wool), gloves, hat, jersey, jumper, knit, knitting bag, measure, needles, pattern, pattern book, pencil, pins, pull-over, scarf, scissors, seam, sew, sewing needles, silk, sore (eyes), stitch, stitch counter, tape, three ply (wool), two ply, wool.

SEWING (35)

belt, blazer, blouse, bobbin, boxes, buckle, button, button hole, chalk, cloth, coarse (needle), coat, collars, cotton, curtain, cushion cover, cut, darning wool, design, draper, dress, dressmaker, embroidery silk, fold, frock, handkerchief, hem, iron (electric), jacket (French), knot, material, measure, measuring tape, mend, needle, needlecase, needle eye, night dress, overall, paper, pattern, pencil, pin, pin cushion, pieces, plastic, pleat, press stud, pyjamas, rayon, satin, scissors, scraps, selvedge, sew, sewing machine, shirt, silk, silver, skirt, smocking, spool, stitch, table, table cloth, tack, tailor, tailoring, tape, thimble, tray cloth, wax (needle), wool.

LOOKING AFTER PETS (74)

animals, animal dealer, acquarium, baked peas, bandage, basket, bath, birds, biscuits (dog), bitches, bobhole, bones, box, bowl, breed, breeder, brush, butcher, cage, canary, carrot, cat, clean, clip, collar, combs (dog), corn, cushion, dachshund, dandelion, disc, disinfectant, doctor, dog, dog trainer, ducks, eagle, eggs, feed, feeder, feedings, flea powder, fish, food, goldfish, grass, greyhound, grill landing, grooming, guinea pig, hen, hound, hut, hutch, kennel, kennel maid, kitten, lead (chain), leeches, lettuce, licence, lint, locks, meat, mice, milk, nest pans, number plate, ointment, pair (dogs), parrot, pedigree, pen, perches, pigeon, pigeon hole, plate, pond, poultry, pups, puppies, rabbits, rings, sand, saw dust, scissors, sheep dog, stable, straw, sty, soap, swing bell, syringe, tarpaulin, teach (animals), terrier, tortoise, veterinary surgeon, wash, watch, water, wickets, wire brush, wire netting, worm pills, zoo, zoo keeper.

GARDENING (36)

ammonia, apple, barrow, beans, beetroot, blossom, buckets, bulb, bush, buttercup, cabbage, carrots, cauliflower, clover, cultivation, currants, cut, cutting, dandies, dibble, dig, furrows, fences, fertilizer, flowers, fork, fruit, garden, gardener, green-house, grass cutter, hedge, hoe, hose pipe, lawn mower, lilies, lime, onion, peas (sweet), plants, plant pot, plier, pluck, plum, porch, potato, prong, rake, roller, roots, scissors, seeds, shears, shovel, sieve, soil, spade, spray, sprouts, strings, strawberries, tomatoes, tools, trees, trim, trowel, turn (soil), vegetables, water, water can, water hose, weed, wire fencing.

FARMING (20)

apple, axle, bacon, barley, barns, beef, blade, bucket, bulls, butter, cabbage, calf, cart, cheese, chicken, corn, cows, cowlads, cowshed, crank, crop, cultivation, cut,

cutter, dairy, dairy maid, dog, drill, drive, driver, duck, duckling, eggs, engine, farm, farm hands, farmer, farmer (men/maid), feed, feeding, trough, fields, fig, fork, gloves, graft, grapes, guns, hammer, harvest, harrow, hay, hay fork, hayseeds, hay stack, hay sweep, hay turner, hens, hoe, horse, horse rake, cultivator, ladder, lamb, landgirls, meadows, milk, milker, milking machine, pear, petrol, pick, pigs, plough, potatoes, poultry, rake, reap, reaper, ride, rubber tubes, scythe, seed, sheep, sheep-dog, shepherd, shoe horse, shoe smith, silo, sow, sower, spade, stable, stack, stick, strawberries, swath turner, thrash, thrasher, tractor, tube, turnip, turnip drill, tyre, valve, wagon, wheat.

POULTRY KEEPING (7)

breed, chicken, corn, ducks, eggs, farmer, feed, fields, food, geese, grains, grits, hen, henhuts, huts, mash, oatmeal, pen, perch, pickle, powder, pot (eggs), poultry keeper, straw, vegetables, water, wire netting, yards.

FISHING (42)

angler, bag (keeping nets), bait, bobfloat, boats, broken line, buckbait, bullet, canal, cane rod, canvas, (shoes, bag), cases, catch, catgut, chut, cork, cotton, cud, dace, eel, eyes, ferrule, fish, fish basket, fisherman (amateur, deep sea, professional, river), fishing rod, flax, fly, flyline, float, gudgeon, gut, hemp, herrings, hook, hookwrapper, horsestring net, landing net, lead, ledger, licence, line (cotton, nylon), mackerel, maggot, maggot line, net, pearch, pike, pike rod, plaice, plummet, porcupine, raincoat, ratchet, reel, river, riverbank, roach, rod, rod holder, rodrest, rowing boat, rubber boots, rudd, salmon, sea rod, shots, sinker, spinning rod, steel pin, steel rod, stones, tangles, tench, tent, throw, trouts, twine, waders, waterproof hats, weights, winch fitting, worms.

SCOUTING or GUIDING (33)

axe, badges, bandages, bed, belt, brownie, brown owl, camp, campfire, captain, charts, chief guide, chop, company leader, cook, cords, corkscrew, enrolment (badge), first aid, fire, flag, guide, hat, hatband leather, headquarters, hike, jack, jamboree, jup, kitbag, knife, knot, lanyard, lieutenant, map, mats, morse, neck ties, obedient, parade, patrol leader, pencil, pitch, poles, race, rangers, ropes, run, safety pin, salute, scout book, scout master, semaphore, signal, signalling lamps, skirt, staff, sticks, stones, strings, swim, tenderfoot, tent, ties, tracking, truthful, uniform, union jack, willing.

CYCLING (131)

axle, ball bearing, basket, battery, bell, bend, bicycle, bolts, bottle, bracelocks, bracket, brake, brake blocks, cables, canvas, carrier, celluloid, chain, chain guard, (toe) clip, cogs, compass, cranks, cross bar, cyclist, dynamo, flat tyres, (drinking) flask, frame, free wheel, gear, gear brake, grease, handle, handle bar, handle bar grip, headlight, hub, inner tube, kit, lamp, lampholder, leather, (split) link, machine, map, mend, mileometer, mudguard, oil, patches, pedal, pedal block, piston, plier, polish, puff, pull, pump, puncture, puncture outfit, racing cycle, rear lamp, reflector, repair, rest, ride, rims, rings, roadster, rubber, saddle, saddle bag, saddle bag holder, seat, sit, solution, spanner, speed, speedometer, spindle, spokes, springs, start, steer, stem, step, tandem, teeth, three speed, track, trigger, tread, turn, tyre, valve, valve cap, washer, wheels, wingnuts.

MOTORING (43)

accelerator, axle, bang, battery, bonnet, brakes, bus driver, car, carburettor, carriage, chassis, chauffeur, clocks, clutch, crankshaft, crash, drive, driver, engine, exhaust pipe, fender, flat tyres, foot brake, fuel, fuel gauge, garage, garagemen, gear, gear wheel, glass, grease, guide books, hand brake, handle, headlights, horn, hub, identification plate, ignition key, indicator arm, inner tube, journey, lamps, lever, licence, light, luggage rack, maps, mechanic, mirror, motorist, mudguard, number plate, oil, park, pedal, petrol, petrol pump, petrol tin, piston, plug, pull (starter), pump, puncture, push, radiator, red, repair, rubber, saloon, scratch, seats, signals, sparewheel, speed, speedometer, spokes, spindles, spray, start, starter, start handle, steer, steer wheel, tank, taxi, taxi driver, tools, traffic light, travelling rug, tyres, water, wheel, windows, windscreen, windscreen wiper, wireless set.

CAMPING (77)

axe, bathing trunks, beans, bell tents, billy can, biscuits, blankets, blouse, boats, boating, boil, bread, breadboard, buckets, butter, camp, campfire, campers, camp bed, candles, cans, canvas, caravan, cedar, chop (trees), cleaning, compass, cook, cubs, cups, erect (tent), fire, first aid sets, flag, flour, flysheet, food, forks, gadget, guides, guidecaptain, guide ropes, guy rope, haversack, hike, hiker, kettle, kindle, kitbag, knife, lantern, lashing, light, linen, mallet, matches, map, marquee, mattress, mug, oak, oil, pan, patrol leader, pepper, pillows, pine, plates, poles, pots, potato peeler, rig, rope, rubber rucksack, saucepan, salt, scouts, (ground) sheets, sleeping bag, slippers, spoons, stove, sugar, sump, sweaters, swim, tea, tent, tent pegs, tin food, torch, towel, transport, trenches, uniform, vacuum flask, warden, water, waterbag, water bottle, water proof (tent).

FLYING (Aeroplane) (2)

aeroplane, aircraft, board (plane), circling, cockpit, diving, flight, gunner, land, passengers, pilot, propeller, seats, second pilot, steward, stewardess, wheels.

DANCING (36)

ball, ballroom, ballroom dance, ballet, ballet dress, ballet shoes, band, band leader, bandmen, blouse, bow tie, brass band, cello, chorus girls, clarionet, comedian, concert, conductor, crochet gloves, cymbals, dance, dancer, dance dress, dance hall, dancing shoes, dresses, drum, drummen, evening dress, fancy-dress, floor, folk dance, fast movement, glide, graceful, gramophone, hop, loud speaker, microphone, modern, music, old time dance, partner, piano, player, prizes, pumps, quick fox trot, radiogram, sandal, saxaphone, scent, (tap) shoes, skip, slow fox trot, stage, steps, tail coats, tango, tap, tap dancer, three step, top hats, trumpet, trumpet men, two steps, violin, waltz.

ACTING (54)

actions, actor, actress, amateur, author, background, band, camera lights, cardboard, cast, chairs, characters, chorus, clothes, clown, comedy, comical, comedian, conductor, costumes, crinoline, curtain, dance, decorator, design, dialogue, direct, director, drama, dramatist, dramatize, dress, dressmaker, dressing room, effect, electrician, expression, extras, false eye lashes, fan, fancy dress, fight, flood light, footlight, gallery, grease paint, hero, heroine, imitate, jester, kill, kiss, lay out, lighting, lipstick, love, make up, manager, models, music, mystery, orchestra, paint, painter, pantomime, perform, pianist, platform, plaster, play-wright, producer, programme, prompter, props, scene, scenery, scene mover, screen, script, setting, show, sing,

sound effect, speeches, spotlight, stage, stage manager, suspense, swords, tables, theatre, tragedy, under-study, wig, wing.

PUPPET PLAY MAKING (2)

cardboard, coloured cloth, cotton, drawing paper, glue, heads, needle, newspaper, paper, pencil (coloured, propelling), plasticine, play, producer, puppet maker, scenery, scissors, silk, stage, sticky paper, vaseline, wood cutter.

PIANO PLAYING (26)

back, ballet, bars, bass, books, breve, classics, chromatic, composer, concert, conductor, contrary (motion), count, crochet, demisemiquaver, duet, duster, exercise, finger, flats, frame, hammer, harmony, ivory key, jazz, keys, keyboard, lid, lock, loud, major, manuscript, melody, metronome, minim (crochet), minor, music, music book, music paper, music stand, naturals, noise, notes, octaves, opera, pedals, piano, pianist, pianoforte, piano stool, play, practise, press, quartette, quaver, quick, read, rests, rhythm, scales, seat, semi-quaver, semibreve, sharps, slow, soft, soloist, songs, sound, staff stave, stool, strings, strive, studio, transpose, treble, trio, tunes, tuner, waltz, washing leather.

GOING TO A CONCERT (15)

act, balcony, band, bandmen, boxes, chairs, circle, clarionet, concert hall, comedian, curtain, dancing, director, drum, drummer, exits, flute, gallery, hero, heroine, instruments, laughter, leader, lights, microphone, music, musician, oboe, orchestra, perform, piano, pianist, pit, players, producer, scenery, script, seats, sing, singer, soprano, stage, stage door, stage helper, stalls, tables, theatre, tickets, tricks, uniform, villain, violin, violinist, voice.

METAL WORK (2)

chisel, fill, flux, goggles, melt, metal, worker, soldering, solder, sparks, steel, tin, welding plant.

WOODWORK (52)

axe, bench, bench hook, bench stop, boxes, brace, cabinet, cabinet maker, carpenter, chairs, chisel, chiselblade, craftsmen, cupboard, cutting board, desks, drawing board, drill, fretworker, file, firescreen, furniture, gauge, gimlet, glasspaper, glue, grain, hammer, jackplane, joiner, joints, knife (marking), legs, lath, mallet, measure, mortise, nails, paper, paint, pegs, pencil, plier, plane, planks, polish (French), rubber, ruler, saws (bow, circular, crossout, rip, tenon), sawdust, screws, screw driver, scribe, shavings, smoothing, spokeshave, stain, stool, T-square, table, tools, tooth, trays, varnish, vice, wardrobes, wedge, window, wood (ash, beech, chestnut, deal, elm, fir, mahogany, pine, walnut, willow).

LABORATORY WORK (6)

acids, ammeter, analysis, balances, bases, beaker, (spout) beehive, shell, bench, bombs, bunsen burner, burette, chemicals, clay, (measuring) cylinders, cylindrical, deflagrating spoon, delivery tubes, dyes, evaporating dish, experiment, explosives, (round bottomed) flask, gases, gas jars, iron stand, pneumatic trough, professor, retort, retort stand, rubber tubings, salts, scientist, solution, specific gravity bottle, synthesis, test tubes, tripod stand, voltameter, watch glass, winchester bottle, wire gauze.

DRAWING OR PAINTING (49)

angles, architect, art, artist (commercial), art gallery, background, blending (colours), blotting paper, (paint) box, bristle, brush (camel hair, paint), canvas, canvas stretcher, cards (Xmas, Easter), cartoons, chalk, charcoal, colours, compass, crayons, decorator, design, desk, draw, drawing pin, drawing, easel, indian ink, knife, landscape, linseed oil, masterpieces, mix, model, oil, oil paint, oil paintings, paint, painter, paintings, palette, (drawing) paper, patterns, pen, (drawing) pencil, perspective, portrait, powder, rubber, rule, ruler, scene, scenery, sketch, sketching, steady (hand), strokes, studio, symmetry, T-square, texture, turpentine, water, waterpaint.

PHOTOGRAPHY (21)

album, baseboard, bellows, blanks, bulb (flash, green, orange, red, white), blur, bromide (paper), camera (box, cine, folding, miniature, reflex), camera case, celluloid, click (lever), chromatic (paper), developing, emulsion, enlarge, enlarger, exposure, film, film holder, filter (red, yellow), fixing, focus, (printing) frame, gaslight, glaze, glossy, hypo, infra red, instantaneous, key, lens, (magnifying) lens, lens hood, lever, life, light (flash, red, white), nature, negatives, object, orthofilm, measuring glass, model, parachromatic, photos (clear, cloudy, smoky), photographer (amateur, newspaper, press, professional, reporter), pictures, plates, portrait, pose, prints, printer, range finder, roll, (fixing) salts, scenery, sensitive paper, shutter, sight panel, snaps, snapshot, spare (lens), spools, (tripod) stand, still, studio, tanks, tap, thermometer, time, time mechanism, tint, tray, view, view finder, washing (prints).

It was expected that the vocabulary supplied by the children who were familiar with activities would markedly differ from that of an average child. But apart from a few words in certain activities like fishing, the words supplied were commonplace and can be reasonably considered to be known to every child. However, those children who were familiar with these activities must have given more thinking to different aspects of the activity and precisely the same words symbolising different actions, things, etc., would be more meaningful to such children than to the ordinary child.

6. *Analogy Justification Tests* Out of the word-material thus provided by the children, it is possible to construct different types of tests such as classification, opposites, sentence completion, reasoning, analogies, etc., but we have restricted our test to analogies only. Since the stress in this experiment is on the child's response to the material content of test-items it is important that while we vary the content we should keep the *operation* constant. A series of experiments covering different operations should be conducted but within each experiment a single operation should be used for all the test-items. Besides, we had to work within limitations of time and, therefore, other forms of tests were not tried. We do not propose to construct the analogy tests in the usual manner for the reasons discussed below.

It was decided that relation-finding was one of the most important operations, one, moreover, closely related to the modern conception of "intelligence", and thus a suitable operation on which to concentrate in this first "pilot" experiment. But apart from Spearman's account of

" relations " in connection with cognitive processes, an account open to certain criticisms,[31] there seems to be no published treatment of this subject directly applicable to test construction. The treatment adopted is, therefore, based, with Professor Meredith's permission, on his as yet unpublished Epistemic Theory. What follows is, therefore, largely drawn from this.

The " eduction " of a relation between two items is too simple a way of describing many of the mental operations involving relations. In an analogy, for example, such as

Head : Eye as House : door, window, rainbow, roof,

a whole group of operations is involved. " Head " and " House " have to be considered together. The various possible relations between " Head " and " Eye " have to be applied to " House " and all except one must be rejected as inapplicable. For example " Eye " differs in colour from " Head " " Rainbow " differs in colour from " House ". But most candidates would rightly reject " Rainbow " for reasons which are not easily stated but which are nevertheless cogent, on some such grounds as " being far-fetched and implausible " It is *a possible* relation but not the *best* relation. There is an implicit assumption that there is one *right* and *best* relation, not determined by the first two words only but by the semantic framework of the whole test item. This is a clear case of the application of the Gestalt " Law of Pragnanz " The purely analytical Noegenetic account of the process of completing the test item fails because it can only predict that *a* relation will be educed. Whether explicitly or implicitly the test designer has a " best " relation in mind and this is *not* a subjective preference but is an attribute of the actual semantic complex chosen. " Eye and head, Window and house ", form a far more " acceptable " tetrad of terms than " eye and head, rainbow and house " Now " acceptability " is an elusive quality and may in the last resort be regarded as an aesthetic rather than as an intellectual category. But we have no right to assume that the facts of mental life divide themselves up naturally under our theoretical headings. An aesthetic element may well enter into all our intellectual operations as it does in many mathematical processes. But the aesthetic judgments are notoriously subject to conventional influences and the whole history of art is a succession of rebellions by original minds against the cramping influence of conventionally " acceptable " pattern. A mental test which depends upon the ability to sense the most " acceptable " pattern may actually penalize the more original minds, and the validation process merely confirms this tendency. Original minds are always in a minority but they are the true salt of the earth. And if the very items in which their originality shows best are eliminated because of a low coefficient of validity the test fails to do them justice.

---

31. See *G. P. Meredith*: " Analysis of Relations ", Proceedings of the Leeds Philosophical Society, Leeds, 1949, and " A Revision of Spearman's Noegenetic Principles ", Proceedings of the Aristotelian Society, London, 1949.

Now we must be careful here not to get lost in large and confusing issues. Do we wish to measure facility in sharply definable operations or do we wish to measure the ability to apprehend " acceptable " patterns ? The general run of intelligence tests mixes these two. So does the common notion of " intelligence ". Both are important but they are distinct. It would be arbitrary to say which is the more important. Each has its own sphere of importance, though it is doubtful if they actually *operate* separately. But it would seem likely that some test items put more stress on the one and some on the other. For example the translation of code message, given the meanings of the separate code-symbols, measures a definable operation, but rearrangement of a jumbled sentence measures the ability to apprehend an " acceptable pattern ". And in the latter case there may be more than one possibility as in the following actual case the jumbled sentence, when rearranged, was intended to read

The woman had lost her child.

But some candidate might give the equally grammatical answer :

The lost woman had her child

(an answer actually obtained by one tester).

Our aim in the present test is to measure facility in definable operations. The difficulty of an item will therefore lie not in its demand for a search among a number of possible alternative patterns to find the " best " but in the complexity of a group of quite specific operations. If " difficulty " can be aligned with " complexity " it may be possible to arrive at a non-statistical definition of " difficulty " The advantage of this would be that we could then determine the *intrinsic* difficulty of a test item. A child is bright if he can *easily* perform tasks of intrinsic difficulty. Without such a definition " difficulty " is always a partly subjective concept. But it would be better to avoid this ambiguous term altogether and speak rather of " intrinsic complexity " Here the stress is on competence and not on originality. The original mind is neither penalized nor favoured. If it has high competence as well as originality that will be shown, and if low competence that too will be shown. There are original minds with high or low competence and there are competent minds with high or with low originality. Thus, if this analysis is correct, originality *interferes* with the score for items in which " acceptable patterns " have to be found, but has no influence on the score for items in which " definable operations " are required. This analysis could be put to the test by a factor analysis of scores from a group of specially designed Tests. In any case it does not actually affect our procedure but rather gives a hypothetical justification for restricting ourselves to a particular type of test, viz. one of " definable operations ".

In the ordinary Analogy test three terms are given and a search for the fourth is required to complete the tetrad. This is not a definable operation. Nor can it be described as the " eduction of a relation ". Formally it is the " eduction of a correlate " but this simply describes the outcome not the mental processes involved. Let us attempt, therefore, to arrive at definable operations on *complete tetrads.* (The term

"tetrad" is here used not in Spearman's sense of "tetrad differences" but simply to refer to a set of four terms forming an analogy.)

Given an analogical tetrad what operations can be performed on it? By itself it does not constitute a *question*, but merely a *statement*. As such it requires nothing to complete the same. There are two possible groups of operations, *either* it can be *analysed* in some way, *or* it can be related to some other statement. The following account is confined to the former.

We cannot proceed further here without adopting a definite interpretation of the word "relation". "A Relation," as Professor Meredith puts it in his unpublished book Epistemics, "is not something *given* but something *taken*. Since it is always selected this implies a *selector*. Thus *all Relations* are *Cognitive Items*. The establishment of a Relation occurs within the total Cognitive Potence of an Organity. It may be established by Impressions or Operations."[32] He further states that "Relations are not *educed* but *produced*" and he elucidates this point by saying that they are "manufactured from something taken." As Relations are "manufactured" he classifies them according to the manufacturing processes: (1) Direct Relation, (2) Formal Relation, and (3) Historical Relation. "A Direct Relation," according to him, "is a selected structure consisting of two or more *directionally* associated Character-Values cognized in a single Event." While the Formal Relation he defines as "a selected structure consisting of two or more *operationally* associated character-values arising in Cognitive Items". The difference lies in the fact that Direct Relations express aspects of actual *events* in which objects undergo a change of some kind, the changes being casually connected. Here the mind abstracts the Relation from the actual event, e.g. "the Wind dries the washing" Here the washing loses moisture and the air gains it—an association of property changes. Transitive verbs, thus express Direct Relations. In Formal Relations the terms may have no actual connection with each other in the sense of being involved in the same event, e.g. a mountain and a molehill. But the mind associates their sizes and establishes a Relation "greater". Historical Relations are intermediate and share the features of both Direct and Formal Relations. An *owner* of a house may not actually do anything with the house but there have been events involving the building and selling of the house which have determined his ownership, events involving other people as well.

Thus a possible analysis of an analytical tetrad is the process of identifying the Relations constituting the Analogy. Now "identification" can be determinate only by reference to an established *classification*. There must be a scheme of properties in terms of which the Relation is to be defined. Given such a scheme we can then convert the tetrad into a question by asking

"In respect of which property difference is this a valid analogy?"

---

32. *G. P. Meredith*: "Epistemics", A Study of the Structure and Transmission of Knowledge, Department of Psychology, Leeds University, 1950, p. 36.

This implies that all the Relations constituting the tetrad in the test must be such as can be identified in terms of the given scheme of properties. The whole test then becomes determinate and the indefinite search entailed by analogies commonly used in mental tests is eliminated. The operations are definable. It was necessary to give sufficient preliminary explanation so as to make clear what is required of the candidate. Ordinarily relations are not made explicit and our language is poor in means for giving simple expression.

The scheme of properties already referred is a simplified version of Professor Meredith's Epistemic "Qualifications". It includes six descriptive terms, colour, shape, material, use, position, origin. (To carry the principle of determinateness to its logical conclusion each of the above should be subdivided into specified and allowable varieties. This is hardly practical particularly such a property as shape. But the principle could be modified to allow for a limited number of choices of descriptive terms in respect of each separate item, where necessary.)

Boxer is to Ring and Footballer is to Field.

The relation is one of *position*. No subdivision is necessary because the boxer can be *anywhere* in the ring. The preliminary explanation would point out that every object or person has a whole list of things in which he can be described—a certain *colour*; a certain *shape*; *made of* certain things (e.g. flesh and bones); he *acts* in certain ways; he works in certain *places*; he is *born of* certain parents. *One* of these descriptions makes the following statement true :—

Boxer is to Ring as the Footballer is to Field. Underline the word which makes this true : Colour, Shape, Made of, Action, *Place*, Born of.

The terminology for these six descriptive categories was varied, as far as possible, from item to item so as to provide distractors for children. For example,

Cake is to Flour as Sausage is to Meat.

Shape, Taste, Made with, Where kept, How made, Size.

We are calling these tests "Analogy Justification Tests"

Similar tests were constructed for 8 activities only Animals (looking after pets); Gardening ; Cooking ; Woodwork ; Cricket ; Motoring ; Camping ; Shopping. The selection of activities was made in such a way that both boys and girls would get reasonable opportunities for their favourite activities.

As far as possible only those words given by children were used in the tetrads. We could not strictly adhere to this principle and we employed a few words not given by children for tests for the following activities.

Animals mutton, sheep, beef, ox, horse, harness, wolf.

Camping flies, moths,

Shopping : cheese, milk, bacon, pig, tea, sugar, chops joints, mint, china, dish, chocolate, lemon, vinegar and wool.

Gardening coconut (though in England this should have been placed under "Shopping").

The test as administered to children is reproduced below : —

NAME CLASS

Animals

1. Cat and fish Rabbit and lettuce
(fights, breathes, chases, eats, scratches)
2. Mutton and sheep Beef and ox
(bought from, comes from, born of, moved by, grown on)
3. Hare and tortoise Greyhound and dachshund
(darker, greedier, faster, braver, kinder)

Gardening

4. Mower and lawn Spade and soil
(used on, sharpened by, made with, cut for, run over)
5. Seeds and flowers Wire and fence
(mixed with, prepared by, grown with, made of, bought for)
6. Rake and hoe Fork and spade
(made for, handled like, used by, bought for, sharpened by)

Cooking

7. Rolling-pin and dough , Egg-whisk and egg
(makes, stirs, froths, prepares, softens)
8. Cake and flower Sausage and meat
(cooked with, made from, bought for, tastes like, made like)
9. Granulated sugar and salt Milk and vinegar
(tastes like, looks like, made from, mixed with, pours like)

Woodwork

10. Hammer and nail Screw driver and screw
(hits, twists round, pushes, sends in, blunts)
11. Saw and sawdust Plane and shavings
(makes, used for, kept with, looks like, sharpened by)
12. Plane and spokeshave Drill and gimlet
(made like, works like, turns like, looks like, feels like)

Cricket

13. Bat and ball Ball and wicket
(for playing, for running, for scoring, for hitting, for catching)
14. Willow and bat Leather and ball
(grown with, material for, bought by, works with, made in)
15. Cap and head Bails and stumps
(to, in, from, by, on)

Motoring

16. Radiator and water Tank and petrol
(worked by, filled with, kept on, cooled by, used in)
17. Tyre and rubber Windscreen and glass
(made from, used for, bought with, kept in, seen through)
18. Headlights and sidelights Handbrake and footbrake
(same shape, same place, same use, same price, same size)

Camping

19. Food and flies Light and moths
(spoils, gathers, attracts, kills, dazzles)

20. Canvas and tent — Wood and fire
(bought for, material for, made by, stoked with, covered with)
21. Camp and field — Camper and sleeping bag
(for, by, to, in, at)

Shopping

22. Goods and customer — Money and shopkeeper
(handed to, sent for, fetched by, used with, bought from)
23 Cheese and milk — Bacon and pig
(sold with, eaten with, paid by, made from, used in)
24. Tea and sugar — Chops and joints
(same taste, same price, same shop, same colour, same weight)

Animals

25. Collar and dog — Harness and horse
(driven by, made from, prepared by, sold to, worn by)
26. Kittens and cat — Puppies and dog
(mate for, born of, bought for, kept with, used by)
27. Pigeon and canary — Fox and wolf
(similar colour, similar size, similar weight, similar shape, similar strength)

Gardening

28. Currants and bush — Apple and tree
(planted on, grown for, watered by, picked from, eaten with)
29. Bulb and plant — Blossom and fruit
(made of, used for, comes from, followed by, looks like)
30. Apple and plum — Egg and cocoanut
(same shape, same taste, same size, same colour, same weight)

Cooking

31. Bacon and frying pan — Potato and saucepan
(kept in, comes from, fried in, boiled in, cooked in)
32. Sugar and jam — Meat and broth
(made from, used for, made like, looks like, mixed with)
33. Flour and icing sugar — Butter and margarine
(tastes like, made from, pours like, looks like, used like)

Wood Work

34. File and metal — Sand paper and wood
(cuts, smoothes, bends, sharpens, twists)
35. Tree and plank — Plank and box
(grows from, made with, made into, cut by, handled by)
36. Tooth and saw — Leg and table
(used for, made by, goes through, stands on, part of)

Cricket

37. Shin-pads and legs — Gloves and hands
(made from, used by, kept in, made for, covered by)
38. Flannel and trousers — Wood and bails
(works with, made of, bought by, material for, made in)
39. Stumps and pads — Hands and gloves
(to, in, from, by, on)

Motoring

40. Wheels and axle — Lights and battery
(used in, made of, worked by, fixed on, turned by)
41. Car and dealer — Petrol and garage
(kept in, made by, used for, travels in, sold by)
42. Mudguard and wheel — Bonnet and engine
(to, in, over, from, through)

Camping

43. Tree and axe — Bread and knife
(kept with, made of, used for, cut with, cut for)
44. Rubber and water bag — Canvas and ruck-sack
(bought for, material for, made by, covered with, used with)
45. Matches and brick — Mattress and map
(similar colour, similar size, similar place, similar shape, similar material)

Shopping

46. Meat and butcher — Mint and green grocer
(made by, liked by, sold by, grown by, killed by)
47. Wool and socks — China and dish
(made from, sold with, grows on, used for, cut for)
48. Sugar and chocolate — Lemon and vinegar
(similar size, similar colour, similar price, similar place, similar taste)

The test was administered to the same group of children who took the previous vocabulary tests. The total number of children who were present for *both* these tests were 225. The children were seated in one big hall in each school.

On the front sheet of the test the following examples were given :—

EXAMPLES

1. Ball and goal — Bullet and target
(kicked at, given to, comes from, *aimed at,* beaten by)
2. Bricks and house — Leather and shoes
(built with, material for, comes from, walks with, cut for)
3. Bicycle-bell and car-hooter — Handle-bars and steering-wheel
(same shape, same size, same weight, same colour, same use)
4. Knife and fork — Dust pan and brush
(with, by, in, to, for)

The test was administered by a supervisor who was given standard instructions which are reproduced below :—

INSTRUCTIONS TO THE SUPERVISOR

(Read slowly and steadily with due emphasis on operative and key words.)

Before we begin, there is one question I want to ask. Who has *not* got a pencil ready ? . . . Good.

Well now, I expect you all remember having some *Tests* earlier this term, in which you were given a list of Activities, asked to show which you were most interested in and what words you could think of describing those Activities.

Today you are going to have the last—and as a matter of fact the shortest—of these Tests, and as it is very different from the ones you've had I want you to listen carefully while I show you what to do.

First, don't forget, it's *not* an examination. We're trying to find out something about questions sometimes given to boys and girls of your age, so there's no question of right and wrong answers, or of seeing how many marks you've got out of 100, or anything like that. Just do the very best you can, and incidentally, as you're having to sit rather close together, *don't* copy what your neighbour is doing. For one thing it won't alter any marks—because there aren't any: and secondly it won't help us to find out what we want to know about these questions.

And finally, no talking at all during the tests. If you do break your pencil or anything like that, put your hand up and one of us will come to you.

Any questions before we begin ? Good.

Now, in front of you the Test is folded up with a blank page facing you. Without unfolding or turning it write your name at the top—by the fold—and your class at the bottom Then put your pencils down Anyone not done that ? Good.

Now open out the fold in front of you are four Examples.

Look at Example 1. On the left are the names of two objects, ball and goal: on the right are the names of two other objects, bullet and target. Can anyone *not* see them ?

Just beneath are five phrases:—kicked at, given to, comes from, aimed at and beaten by. You will see that *aimed at* is *underlined*. That is because a ball is *aimed at* a goal *AND* a bullet is *aimed at* a target.

Let's try the other phrases. "Kicked at". Is a ball kicked at a goal ? . Yes. But is a bullet kicked at a target ? No. So we can't underline "kicked at".

Is a ball *given to* a goal ? No. Is a bullet given to a target ? No. So we can't underline "given to".

Would either of the other two phrases do ? No. So the only phrase which joins *both* pairs, sensibly, is "*aimed at*", so *that* has been underlined.

Now look at Example 2. This deals with "making things". On the left the two objects are bricks and house. On the right are leather and shoes.

Now, are bricks built with a house ? No. Yes, house *is* built with bricks, but the question wasn't asked that way round. You *must* keep the words in the order they are given. So the answer is no and we can't underline "built with".

Try "material for". Are bricks the material for a house ? . . Yes. Is leather the material for shoes ? Yes. So "material for" *is* underlined. Now you try and see if any of the other three phrases would also do for both pairs. . No, only "material for" joins both pairs of objects, at the same time, so that is the only one to underline.

Look at Example 3. This deals with Motoring and Cycling. Bicycle-bell and car-hooter on the left. Handle-bars and steering-wheel on the right. Now you try each of the five phrases beneath, one by one, and underline any which joins *both* pairs of objects, sensibly, at the same time. Go ahead. Hands up for answers. "Same use" Yes. Bicycle-bell and car-hooter have the same use—to warn people who are in danger or in the way. Handle-bars and steering-wheel have the same use—to steer the thing we are riding on or in. Any others ? No. So only "same use" is underlined.

Now try Example 4. This deals with "things-in-the-house". Knife and fork dust-pan and brush. Underline *any* of the five words that will join *both* pairs,

sensibly, at the same time. Go ahead . . Stop. Hands up for answers. Yes? "With". Knife with fork. Dust-pan with brush. Any others? No. So only "with" is underlined.

Right. Pencils down. Now, are there any questions? When I say BEGIN I want you to turn over this page of examples, begin at Number 1 and go right ahead till I say STOP. All the questions are like the ones you have been doing, and if you really can't do one, *don't guess*, but go on to the next. Don't forget, try *every one* of the five phrases and underline each one which joins *both pairs* of things, sensibly, at the same time.

Turn over the Example sheet. Take no notice of Name and Class—you've done that. BEGIN 25 minutes. STOP Pencils down Close your Test up and leave it with the Example page on top.

When this test was first administered in the grammar school, it was discovered that two correct answers were possible to example No. 4. This was very unfortunate. The supervisor in charge instructed the children to underline both phrases if there were more than one possibility. In the test itself there were no such discrepancies. However, in order to keep uniformity similar instructions were given in the modern school. This must have affected the scores to some extent as we reckoned all items incorrect wherein more than one response was recorded.

7. *Test Results*: We give below the actual scores obtained by the individual children on different sub-tests. There were eight sub-tests representing eight different activities. Each sub-test was made up of six items and, therefore, the maximum possible score in each sub-test was six. There was only one correct answer to every test item and whenever more than one answer was recorded the item was considered incorrect. The last colmun gives the individual child's average score for eight sub-tests. Whenever a score is underlined it indicates that the activity representing the sub-test is within that child's preferred range. At the bottom of the table are given means and standard deviations of the scores on different sub-tests as well as those of individual average scores.

TABLE No. VII

(N = 225)

(A = Animals; G = Gardening; C = Cooking; W = Woodwork
Cr = Cricket; M = Motoring; Ca = Camping; S = Shopping)

No.	A	G	C	W	Cr	M	Ca	S	Mean
1	2	6	5	6	4	6	4	6	4.87
2	6	6	5	6	6	6	5	5	5.62
3	6	6	4	6	6	6	5	4	5.37
4	6	6	5	6	5	6	5	5	5.5
5	6	5	4	6	5	6	6	5	5.37
6	5	6	6	6	5	6	5	6	5.62

No.	A	G	C	W	Cr	M	Ca	S	Mean
7	4	6	6	6	6	6	3	5	5.25
8	6	6	5	6	5	6	3	5	5.25
9	5	6	5	6	6	6	5	6	5.62
10	5	6	5	6	5	6	4	6	5.37
11	5	6	5	6	6	6	6	6	5.75
12	6	6	4	6	6	6	5	6	5.62
13	6	6	5	6	5	6	6	6	5.75
14	6	6	4	6	6	6	5	6	5.62
15	6	5	4	6	5	6	5	6	5.37
16	6	6	5	6	6	6	6	5	5.75
17	5	6	3	5	6	6	4	6	5.12
18	5	6	5	6	4	6	4	5	5.12
19	6	5	5	6	5	6	6	5	5.5
20	6	6	5	6	6	6	6	6	5.87
21	5	6	6	5	5	6	4	5	5.25
22	5	6	5	6	4	6	5	6	5.37
23	5	6	4	6	4	6	5	6	5.25
24	5	5	5	5	6	5	5	5	5.12
25	5	6	5	5	6	5	4	5	5.12
26	5	6	5	5	6	6	6	6	5.62
27	6	6	5	6	6	5	6	6	5.75
28	6	5	4	6	6	6	5	6	5.5
29	6	5	5	4	3	6	5	5	4.87
30	6	6	5	6	5	6	4	5	5.37
31	5	6	5	6	6	6	5	6	5.62
32	6	6	5	6	6	5	6	6	5.75
33	6	5	5	6	6	6	5	6	5.62
34	6	6	5	6	6	6	6	6	5.87
35	6	6	5	6	5	6	6	5	5.62
36	5	6	5	5	5	6	5	5	5.25
37	5	4	5	5	5	6	6	6	5.25
38	3	5	5	6	4	6	5	6	5.0
39	6	6	5	6	5	6	5	6	5.62
40	6	6	6	6	6	6	6	6	6
41	6	6	6	6	6	6	6	6	6
42	6	6	6	6	5	6	5	6	5.75
43	6	6	5	6	5	6	4	5	5.37
44	6	6	5	5	6	6	5	6	5.62
45	6	6	4	6	6	5	4	6	5.37
46	6	6	5	5	6	6	5	6	5.62
47	6	6	5	4	5	6	5	6	5.37
48	5	6	5	5	5	6	6	6	5.5
49	5	5	5	5	6	6	5	3	5.0
50	6	6	5	6	6	6	5	6	5.75
51	6	6	5	6	5	6	6	4	5.5
52	5	6	4	5	5	6	5	6	5.25

No.	A	G	C	W	Cr	M	Ca	S	Mean
53	6	5	4	5	4	6	5	5	5.0
54	4	6	4	5	4	5	4	4	4.5
55	6	6	3	5	5	6	6	6	5.37
56	6	6	4	6	6	6	5	6	5.62
57	5	6	5	6	6	6	5	6	5.62
58	6	6	5	6	5	6	6	5	5.62
59	6	6	4	3	3	3	1	3	3.62
60	6	6	5	6	6	5	5	5	5.5
61	5	6	5	6	6	6	6	5	5.62
62	4	4	5	5	5	5	4	6	4.75
63	6	6	3	6	5	6	5	6	5.25
64	6	6	5	6	5	6	6	6	5.75
65	4	4	6	5	5	6	6	5	5.12
66	6	6	4	6	6	5	5	5	5.37
67	6	6	6	4	6	6	5	6	5.62
68	6	6	6	5	5	5	4	6	5.37
69	5	6	4	4	4	5	5	4	4.62
70	5	4	4	5	4	3	4	5	4.25
71	6	4	5	4	5	5	4	5	4.75
72	4	4	4	5	5	6	5	6	4.87
73	6	6	5	6	5	6	4	5	5.37
74	4	6	5	4	5	6	3	6	4.87
75	4	3	3	5	3	6	4	2	3.75
76	2	5	5	6	5	5	3	6	4.62
77	6	6	5	5	6	5	5	5	5.37
78	6	5	4	5	4	5	6	5	5
79	5	6	5	5	6	6	5	6	5.5
80	6	5	3	6	4	6	5	5	5.0
81	6	6	6	5	3	6	5	6	5.37
82	6	6	5	5	4	6	4	6	5.25
83	6	6	6	5	5	6	6	5	5.62
84	6	5	5	6	6	6	6	6	5.75
85	5	6	3	5	6	6	5	5	5.12
86	6	4	4	5	3	5	5	5	4.62
87	5	5	4	6	3	5	6	6	5
88	4	6	5	6	6	6	4	5	5.25
89	6	6	6	5	5	6	5	4	5.37
90	5	6	6	5	6	6	6	6	5.75
91	5	6	4	6	6	3	5	6	5.12
92	4	6	5	6	5	5	5	6	5.25
93	5	6	4	6	6	6	5	6	5.5
94	6	6	5	6	5	6	5	6	5.62
95	6	6	4	6	6	6	5	5	5.5
96	4	6	4	6	4	5	5	5	4.87
97	6	6	3	5	6	6	5	6	5.37
98	5	5	5	6	6	5	5	5	5.25

No.	A	G	C	W	Cr	M	Ca	S	Mean
99	5	6	5	5	5	5	5	6	5.25
100	6	5	3	6	4	5	3	4	4.5
101	5	6	5	4	5	6	6	4	5.12
102	6	6	5	6	6	6	5	5	5.62
103	6	6	4	6	6	6	3	5	5.25
104	4	6	5	5	4	3	2	5	4.25
105	4	5	5	4	4	5	5	6	4.75
106	6	5	5	6	6	5	6	6	5.62
107	6	5	4	4	5	5	5	5	4.87
108	5	6	5	6	4	6	6	5	5.37
109	5	6	3	6	6	6	6	5	5.37
110	5	5	6	4	5	6	6	6	5.37
111	6	6	4	6	4	6	5	5	5.25
112	5	6	2	4	5	5	5	5	4.62
113	6	6	5	6	4	6	5	4	5.25
114	6	6	5	6	5	6	5	6	5.62
115	6	6	4	6	5	6	6	5	5.5
116	6	6	2	5	6	6	5	6	5.25
117	5	5	5	5	2	5	5	6	4.75
118	6	6	5	6	6	6	6	5	5.75
119	6	6	6	5	3	6	5	5	5.25
120	6	5	5	6	5	6	5	6	5.5
121	6	6	5	6	5	6	5	6	5.62
122	6	5	4	6	6	6	6	5	5.5
123	6	6	4	6	3	6	5	6	5.25
124	6	6	5	6	4	6	6	5	5.5
125	6	5	5	5	4	6	5	5	5.12
126	4	4	3	4	2	1	2	1	2.62
127	6	6	4	5	6	6	5	6	5.5
128	6	3	5	5	4	4	6	5	4.75
129	6	6	5	5	6	5	5	6	5.5
130	6	6	4	6	6	5	5	6	5.5
131	5	3	4	5	5	6	5	5	4.75
132	6	6	4	6	6	5	5	6	5.5
133	6	6	5	6	5	6	4	6	5.5
134	5	5	5	6	6	5	4	6	5.25
135	5	6	3	5	5	5	4	5	4.75
136	5	4	5	5	4	5	5	4	4.62
137	6	5	5	5	4	6	4	5	5
138	6	5	3	5	5	4	6	5	4.87
139	5	5	4	6	6	5	6	6	5.37
140	5	6	4	5	6	6	5	5	5.25
141	6	5	5	6	5	6	5	6	5.5
142	5	5	4	5	5	4	4	3	4.37
143	4	3	4	6	5	5	4	3	4.25
144	5	4	1	6	5	5	5	3	4.25

No.	A	G	C	W	Cr	M	Ca	S	Mean
145	5	4	1	6	5	5	5	3	4.25
146	5	5	4	4	6	5	5	6	5
147	5	4	5	6	6	5	6	5	5.25
148	5	6	4	6	6	6	4	6	5.37
149	5	6	4	6	6	6	5	5	5.37
150	5	3	5	6	5	4	4	6	4.75
151	6	6	4	6	6	6	5	5	5.5
152	6	2	5	5	5	6	5	4	4.75
153	6	4	5	5	3	5	5	5	4.75
154	6	5	4	6	5	6	5	5	5.25
155	6	5	4	5	6	6	6	6	5.5
156	5	5	4	4	5	6	5	6	5
157	6	6	5	4	6	6	6	6	5.62
158	4	4	3	4	5	6	5	5	4.5
159	6	5	5	4	6	5	4	5	5
160	6	6	3	5	5	6	5	6	5.25
161	5	4	4	4	4	3	4	6	4.25
162	4	3	5	6	6	5	4	4	4.62
163	5	6	5	5	4	6	5	6	5.25
164	5	5	2	3	4	5	5	5	4.25
165	6	5	6	5	5	5	4	4	5
166	3	4	3	6	4	4	4	4	4
167	6	6	5	4	4	6	5	4	5
168	5	4	5	5	6	4	5	4	4.75
169	6	5	5	4	3	6	4	5	4.75
170	6	5	2	4	4	5	5	4	4.37
171	6	6	2	6	5	6	6	6	5.37
172	6	4	2	4	4	4	5	2	3.87
173	6	5	2	6	6	6	5	4	4.87
174	6	6	5	6	4	6	5	6	5.5
175	5	3	3	3	4	5	5	4	4
176	5	3	0	1	3	2	3	1	2.25
177	5	5	5	6	6	6	2	4	4.87
178	5	4	6	6	6	5	5	3	5
179	6	6	3	5	6	6	5	6	5.37
180	4	2	1	3	1	3	2	3	2.37
181	5	4	4	3	2	4	2	3	3.37
182	6	3	4	6	5	6	5	6	5.12
183	6	4	3	5	2	3	2	2	3.37
184	5	3	1	2	0	3	1	2	2.12
185	6	5	4	4	4	6	3	3	4.37
186	5	3	2	4	6	5	3	4	4
187	6	5	2	5	5	5	5	5	4.75
188	5	3	2	4	2	2	1	1	2.5
189	5	2	2	4	2	5	2	4	3.25
190	3	2	3	5	4	3	3	3	3.25

No.	A	G	C	W	Cr	M	Ca	S	Mean
191	6	5	4	4	5	5	4	5	4.75
192	6	6	4	5	6	6	6	5	5.5
193	6	3	3	2	4	3	4	2	3.37
194	4	3	4	2	4	4	5	5	3.87
195	5	3	1	4	4	4	3	4	3.5
196	4	6	3	5	6	4	4	5	4.62
197	5	2	1	4	5	4	6	5	4
198	5	5	6	5	5	5	5	6	5.25
199	5	5	3	5	4	5	5	6	4.75
200	5	2	2	5	2	5	4	4	3.62
201	5	6	2	2	3	3	2	2	3.12
202	4	3	0	4	1	1	2	2	2.12
203	5	5	6	5	5	6	3	6	5.12
204	6	4	4	5	6	5	4	5	4.87
205	1	2	4	1	4	3	3	3	2.62
206	3	2	0	3	2	2	2	0	1.75
207	1	0	0	1	0	0	1	3	.75
208	3	2	3	4	5	4	4	4	3.62
209	4	3	2	4	1	5	3	4	3.25
210	5	3	3	4	5	6	4	2	4
211	1	0	1	0	1	0	0	1	.50
212	5	4	2	6	2	4	4	4	3.87
213	5	3	3	4	0	5	2	4	3.25
214	4	3	3	2	4	2	5	1	3.0.
215	5	4	2	6	4	6	4	4	4.37
216	0	0	0	0	0	0	0	0	0
217	4	2	0	0	1	1	2	1	1.37
218	2	2	0	1	2	3	3	2	1.87
219	6	2	4	6	0	2	0	2	2.75
220	3	2	1	2	2	3	2	1	2.0
221	6	4	2	4	2	1	3	1	2.87
222	2	5	3	3	3	4	1	4	3.12
223	5	3	0	4	3	3	2	2	2.75
224	4	2	0	4	4	2	2	4	2.75
225	5	5	5	4	4	4	5	5	4.62
Mean	5.19	4.94	4.03	5	4.65	5.13	4.63	4.81	4.80
S.D.	1.12	1.39	1.45	1.26	1.44	1.31	1.23	1.04	1.06

The main object is to determine from these raw scores whether the individual child's score for sub-tests within his preferred range is greater than his score for sub-tests outside that range. Before presenting the calculated results we propose to give a theoretical discussion of the reasonings behind our assumptions.

Now we assume that every test item has a certain intrinsic structural *complexity* (C_i for item i). The child has to dissolve this complexity so

as to get the correct response. If the item lies within the child's preferred range, this fact offers a certain facilitation (F_i) to the child in dissolving this complexity. Let us suppose that the difficulty (D_i) of the item is directly proportioned to the complexity and subtractively related to the facilitation. Thus

$$D_i = aC_i - bF_i$$

where a and b are constants.

If there are N children and out of them p have expressed preference for the range represented by the sub-test under consideration (containing the item i) then (N — p) is the number of children who have *not* expressed preference. In our theory the facilitation operates for p children and is absent for (N — p) children.

Apart from the facilitation due to experience, the test performance of any child is attributable to one single factor. We need not identify this factor with g. The test is deliberately restricted to a single operation (hence the name V.E.C.O., " Variable Elements, Constant Operation "). Let us call this factor " A ". This may be regarded as a quantity expressing a certain ability for performing certain mental operations in question. For a child ' m ' the amount of this factor is Am.

We can represent the complexity on a linear scale. The ability represented by factor Am with or without facilitation is either sufficient or insufficient to dissolve the complexity of the item, i.e. to give the correct response. If C_i and Am are expressed in suitable units we may express the various possibilities thus :

CASE I

————————C_i

——————————Am. . . . F

Here Am alone is sufficient to enable the child m to pass this item. If there is a facilitation F it is superfluous.

CASE II

————————C_i

—————Am. . . F

Here Am is insufficient alone, but given facilitation, the child passes the item.

CASE III

————————C_i

————Am. . . . F

Here Am even when facilitated by F is insufficient to enable m to pass the item.

From these three cases it will be noticed that it is not possible to gauge in each individual child's case whether the facilitation is operating

or not. The theory would predict that performance on items of medium difficulty, relative to the ability of the individual, would alone be affected by facilitation. But all we know is that the individual answer to the single test-item was either right or wrong. Over a whole set of items *within* the preferred range, however, facilitation should be shown by a higher individual score than that for a set of items of the same intrinsic difficulty *outside* the preferred range. An alternative approach is to compare the *difference* between the individual's score on the sub-test and his average score on all the other sub-tests with the same difference in the case of individuals for whom this particular sub-test was not in their preferred range. For facilitation should affect the former difference but not the latter difference. This was the method adopted here. We describe below the method followed in determining whether the child's preferred range has any appreciable increase in his score for that sub-test.

Whether the individual child has gained or not due to experience we can only say when we compare his performance in that sub-test with his average score for all sub-tests. Standard scores in those cases were then calculated both for sub-tests as well as for average scores, and the differences determined. The following table gives the results :—

TABLE NO. VII

	N	Sum of Standard Scores for sub-tests	Sum of Standard Scores for average Scores	Total Difference	Gain or loss per Child
Animals	68	+ 6.32	— 2.40	+ 8.72	+ 0.13
Gardening	34	— 2.13	— 0.18	— 1.95	— 0.06
Cooking	67	+ 7.03	+ 2.42	+ 4.61	+ 0.069
Woodwork	49	+ 11.90	+ 8.56	+ 3.34	+ 0.068
Cricket	112	+ 2.92	+ 1.30	+ 1.60	+ 0.014
Motoring	44	— 5.13	— 0.20	— 4.94	— 0.11
Camping	65	— 24.27	— 17.82	— 6.45	— 0.099
Shopping	25	+ 3.61	— 2.38	+ 5.99	+ 0.24
		Total gain per child for all activities			+ 0.25

The gain of .25 is for the maximum possible score of 48. If we equate this score for 100—the usual number of test items in any intelligence test —we get a rise of 0.52 point.

8. *Discussion of the Results and Conclusion*: If it could be assumed that the facilitation process worked as our theory suggests then the only general conclusion which emerges from this research is that facilitation causes an average increase in score of .25 out of an average score of 38.4—in no way conclusive evidence in support of our theory. We could hardly expect better results in view of the limitations inherent in our investigation. (1) The number of children who expressed preference for different activities was too small—ranging from 25 for shopping to 112 for Cricket (an average of 58 for each activity)—to make any

generalisation. The ability to perform the necessary mental operation and the facilitation due to experience were not the only two factors operating which contributed to the total score. It is likely that some other factors like emotional instability might also be operating alongside and in a small sample like ours they might be effective enough to vitiate the total score. In a large sample, however, the effects of these factors may become negligible as they might counter-balance each other's effects. (2) As is stated earlier the facilitation due to experience could be observable only in items of medium difficulty relative to the individual ability as the response to the test item could be only either right or wrong. The rise of .25 point is an average rise for all items for all children who have expressed their preference. If it was possible to divide each test item according to the degrees of the difficulty and get responses of children at different levels it is likely that we might be able to show higher differences than what we are able to show. (3) We have compared the scores of the individual children on sub-tests representing activities within their preferred range to the scores on those sub-tests representing activities which are not within their preferred range. This does not, however, mean that the activities which are not within the preferred range of the individual child are unfamiliar to him. We could only say that the rest of the activities are not within the individual child's first five choices. It is very likely that the children have fairly good familiarity with many of the activities not falling within the preferred range and thus the facilitation due to experience might be operating in the other tests as well though not to the same extent as in the former case. This fact must have been responsible to a certain extent for reducing the difference we obtained. (4) The elements in different sub-tests were not divisible into rigid water-tight compartments. Many of the elements were overlapping in more than one activity. For example test elements like sugar, salt, apple, plum, lemon, vinegar could easily go under either shopping or cooking. Similar observation could be made about many other elements which overlap in two or more activities. This lack of rigidity in apportioning elements to different activities must also be instrumental in reducing the difference due to increase in score. (5) The test-items were not sufficiently discriminative and as a result the effect of the facilitation due to experience could not be well observed. Most of the items were too easy and they fell under Case I which we described earlier. (6) We tried in this investigation only one mental operation and the findings may only be taken as indicative rather than as an evidence in support of or against a particular theory.

The final selection of activities was largely arbitrary. Popular as well as less popular activities were included in the battery so as to give fair opportunities to boys as well as girls. A different choice might easily have resulted in positive differences only or equally easily negative differences only. Thus chance plays an over-riding part in determining the results. It is important to admit this point because the more comprehensive investigation, to which this pilot research should be the preliminary, would have to take full account of the whole range of really

significant experiences in order to exclude the chance influence of arbitrary selection.

One defect which could have been remedied if more time and a much larger population had been available was the lack of control over the difficulty of the items. Even within this limited experiment it would have been possible by preliminary trials with a different but equivalent population to secure a better balance of difficulty. Roughly speaking each sub-test should have the same average difficulty and the same range of difficulties, among the items. But a great deal more statistical work would be required to ensure that the difficulty for each sub-test was assessed in respect of children for whom the particular activity in question was *not* within their preferred range. Otherwise, if facilitation is really operative, it would distort the difficulty-distribution. The corollory of this is that each sub-test needs to be validated for a somewhat different but equivalent sub-population, viz. partly different in personal composition but equal in average ability.

To illustrate this point let us over-simplify the problem. Suppose the total population used is only 10 and the number of activities is only 3. Let us represent preferences by arrows, children by squares and activities by circles.

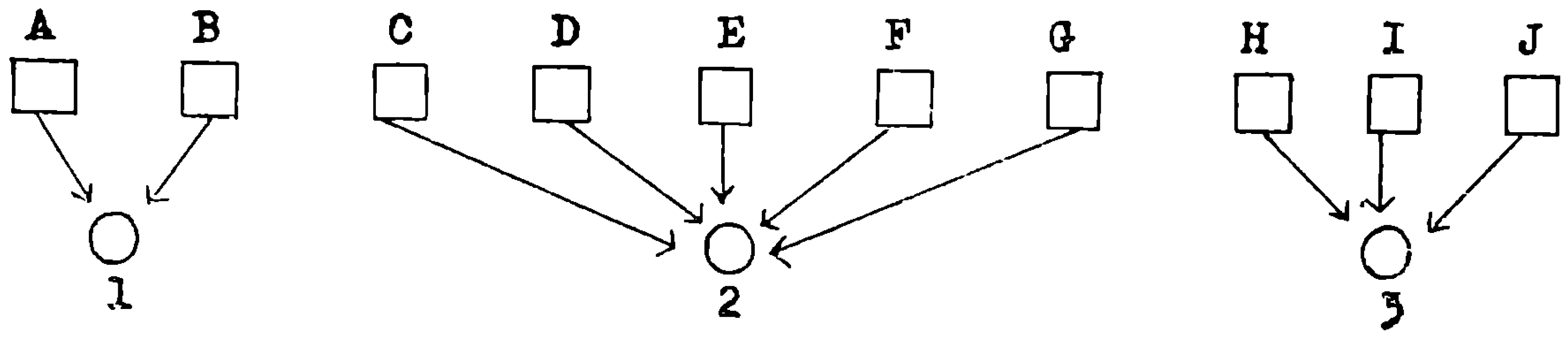

Then the trial sub-population for :

sub-test 1 would be chosen from C D E F G H I J
2 A B H I J
3 A B C D E F G

Now the statistical problem would be to select all our sub-population so as to be of the same average ability as judged by some independent criterion (i.e. the I.Q.). This would mean working with a very large population and gradually eliminating all candidates whose ability disturbed the agreed average. In our example this would mean chosing from the sub-population

C D E F G H I J
A B H I J
and A B C D E F G

those individuals who in each case would together give the same average I.Q. The relative difficulties of the three sub-tests could then be compared without the disturbing effect of differences in average ability, and also, by our procedure, independent of possible facilitation.

To determine the influence of facilitation an exactly similar process of elimination, in order to give equal average ability among the groups, would have to be followed with the *preferring* candidates, i.e. the sub-populations A B, C D E F G and H I J.

The average I.Q.'s of these three groups would have to be not only equal to one another but also equal to those of the non-preferring sub-populations. Obviously many hundreds, or even thousands, of children would be needed to secure sufficient freedom of choice in carrying out these statistical operations.

If the experiment could have proceeded on this scale it might as well have gone further and taken the full range of significant experiences and a much wider range of mental operations. But it would not then have been a pilot experiment. Our aim has been, by a *limited* trial, to show what are the main issues involved in this problem and to give a try-out to certain techniques for finding a solution. This, rather than any definitive conclusions, we may fairly claim to have achieved.

Epistemics : Knowledge is very complex and we do not know how it works in the mind of any individual. But in recent years Professor Meredith has developed a new technique—" Epistemics " [33] for the structural analysis of knowledge and the systematic study of knowledge transmission. It has an important bearing on the present investigation mainly in two respects. Firstly it offers a comprehensive classification of the objective ingredients of *experience*. And secondly it provides a new and more realistic analysis and classification of *relations*.

The child's experience is objectively determined by reference to his environment. Epistemics divides the environment into Levels and subdivides the Levels into Primaries and Derivatives. The classification is very complex but the treatment justifies the need for such a comprehensive classification to analyse equally the complex structure of the environment. It was felt that it was too complex to adopt as a basis for the present investigation and we made an arbitrary list of activities. We have pointed out earlier the disadvantages of such a procedure. The only way to avoid arbitrariness is to be completely comprehensive or at least adopt some rational method of *sampling* the environment. But this would require much time.

We have, however, made deliberate use of the Analysis of Relations in the construction of the " Analogy Justification " test. Unlike Spearman's treatment of relations two *objects* are here related through particular *properties*, since two objects in themselves were considered insufficient to define a relation between them. When the properties are specified, the relation becomes determinate. These relations are divided into three classes : Direct, Historical and Formal and we have used all three in the " Analogy Justification " test.

---

33. *Meredith, G. P.*: Epistemics—A study of the Structure and Transmission of Knowledge, Department of Psychology, University of Leeds, 1950.

This analysis is capable of producing an enormous variety of quite precisely defined relations and could be employed as a systematic basis for test construction. One could hardly expect to exploit the advantages of such a system in a single test of 48 items. But it has immense potentiality and in a fuller investigation the testing would be considerably facilitated by using such a system.

9. *Outline for future research*: This investigation could be improved upon in many ways and the following are some of the lines suggested on which future work may be pursued :—

(*a*) Preference for a particular activity was determined by children's responses and its validity was never tested. Validity of children's responses should be tested by some such method as interviewing teachers, parents, etc.

(*b*) The range of activities may be increased in order to make provision for every possible significant experience.

(*c*) A similar investigation may be conducted with picture material instead of verbal material. This would make its application possible to a much wider range of population.

(*d*) In the present investigation only one mental operation was tried; but in future researches it could be extended to a much wider range of mental operations. With the aid of factor analysis it may be possible to determine the relative importance of different mental operations.

(*e*) The test elements in our tests overlapped in more than one sub-test. In future tests, only well-defined elements, not overlapping in any other sub-test, may be selected for the purpose of building test items out of them.

(*f*) As we pointed out earlier, the test-items may be validated on a sample population different in personal composition but equal in average ability. Such validated test items alone should be selected for the final investigation.

(*g*) In all these investigations a larger population may be employed so as to ensure statistical significance in the results.

(*h*) The sub-tests may be standardized on appropriate groups. The fact that the "preference population" for one activity overlaps with that for other activities provides a basis for Standardization.

(*i*) The simple dichotomy of preferred non-preferred should be replaced by a *scale of preference*. In assessing the results we should then replace the crude method of *differences* (between average scores for preferred and non-preferred items) by *correlations* between *score* and *degree of preference*.

10. *Summary*: (*a*) The experiential backgrounds of individual children were obtained for 74 different activities on a five-point scale.—Done, Seen, Cinema, Heard (or Read) and Unknown. The familiarity of the individual child with different activities ranged from "Done" to

" Unknown " and this was considerable since the activities selected were supposedly within the common experiences of the average school child.

(*b*) Their preference for these activities was obtained on a three-point scale—Like, Dislike, and No Opinion. The ranges of preference expressed varied from activity to activity as would be expected.

(*c*) Thirty different activities were selected and the children were asked to choose the best five activities which they like and which they have done themselves. Frequency of preferences for different activities varied from as low as 2 to as many as 117 children.

(*d*) Each child was asked to supply the vocabulary connected with the activities within their preferred range. Directives were given so as to restrict their vocabulary to the activity concerned. The vocabulary supplied was unfortunately not always sharply distinguishable for its specificity.

(*e*) A new type of test—the " Analogy Justification " was constructed out of this word material for eight different activities. The whole test was made up of eight sub-tests—each representing a separate activity. Mental operations in all the sub-tests were constant but the elements varied from sub-test to sub-test (hence the name " V.E.C.O.", " Variable Elements, Constant Operation "):

(*f*) The test was administered to the grammar as well as the modern school children numbering about 270. After eliminating cases of children who were absent for one of the two tests, results were calculated for 225 children.

(*g*) Differences were found between average standardized scores of candidates for " preferred " and " non-preferred " sub-tests. Where these differences are positive they *could* be attributed to " facilitation ", but unfortunately three out of eight were negative. In any case the limitations of the experiment would prevent any valid conclusions from being drawn.

(*h*) The whole experiment is to be regarded as a pilot investigation to open up the problem of experiential influences on test scores for further investigation.

BIBLIOGRAPHY

Anastasi, A., " Differential Psychology ", New York, 1937.

Asher, E. J., " The inadequacy of current Intelligence Tests for Testing Kentucky Mountain Children ", J. Genet. Psychol. 46, 1935, 480-488.

Binet, A. and Simon, T., " The Development of Intelligence of Children ", Baltimore, 1916.

Blackburn, J., " Psychology and Social Pattern ", London, 1945.

Blackburn, J., " Influence of the Social Environment on Intelligence Test Scores ", London, 1949.

Board of Education, " Psychological Tests of Educable Capacity ", H.M.S.O., 1924.

Burt, C., " Ability and Income ", British J. Educ. Psychol., 13, 1943.

Cattell, J. Mck., " Mental Tests and Measurement ", Mind, 15, 1890, pp. 373-381.

Cattell, R. B., " The Measurement of Adult Intelligence ", Psychol. Bull., 40, 1943, pp. 153-193.

Colvin, S. C., " Mental Tests and Linguistic Ability ", J. Educ. Psychol., 14, 1923.

Galton, F., " Inquiries into the Human Faculty and its Development ", 1883.

Gordon, H.. " Mental and Scholastic Tests Among the Retarded Children ", Bd. of Educ. Pampt. No. 44, London, 1924.

Hart, B. and Spearman, C., " General Ability and its Existence and Nature ", Brit. J. Psychol., 5, 1912-13, pp. 51-84.

Hartog, P. and Rhodes, E. C., " An Examination of Examinations ", London, 1936.

Hogben, L., " Nature and Nurture ", London, 1945.

Knight, R., " Intelligence and Intelligence Tests ", London, 1948.

Kuppaswamy, B., " Laws of Heredity in Relation to General Mental Ability ", J. Gen. Psychol., 1947, pp. 29-43.

Meredith, G. P., " Analysis of Relations ", Proceedings of the Leeds Philosophical Society, 1949, pp. 269-278.

Meredith, G. P., " A Revision of Spearman's Noegenetic Principles ", Proceedings of the Aristotelian Society, 1949, pp. 91-114.

Meredith, G. P., " Epistemics ", A Study of the Structure and Transmission of Knowledge, Dept. of Psychology, University of Leeds, 1950.

Neff, W. S., " Socio-economic Status and Intelligence A critical study, Psychol. Bull., 1938, pp. 727-75.

Newman, N. H., Freeman, F. N. and Holzinger, K. J., " Twins—A Study of Heredity and Environment ", Chicago, 1937.

Porteus, S. D., " Primitive Mentality ", Encyclopaedia of Psychology, New York, 1946, pp. 570-583.

Richards, I. A., " The Republic of Plato ", London, 1948.

Sandiford, P., " Foundation of Education Psychology ", London, 1938.

Sims, V. M., " The Influence of Blood Relationship and Common Environment on Measured Intelligence, J. Educ. Psychol., 22, 1931.

Smith, C. A., " Mental Testing of Hebridean in Gaelic and English ", Scottish Council for Research in Education, Report 27, London, 1948.

Spearman, C., " General Intelligence Objectively Determined and Measured ", Amer. J. Psychol., 15, 1904, pp. 201-293.

Spearman, C., " Nature of Intelligence and Principles of Cognition, London, 1923.

Terman, L. M., " The Measurement of Intelligence ", 1916.

Terman, L. M. and Childs, H. G., " A Tentative Revision and Extension of Binet-Simon Measuring Scale of Intelligence ", J. Educ. Psychol., 3, 1912, pp. 61-94.

Terman, L. M. and Merril, M. A., " Measuring Intelligence ", London, 1937.

Wolfe, D., " Factor Analysis to 1940 ", Psychometric Monograph No. 3, Chicago University Press, 1940.

DIFFERENTIATED CURRICULA
in
Secondary School Mathematics on the Basis of Intelligence Level

(A THESIS SUBMITTED TO THE UNIVERSITY OF BOMBAY FOR THE DEGREE OF MASTER OF EDUCATION)

By

Shri VAMAN RAMCHANDRA GOKHALE, B.A., B.Sc., M.Ed.

Assistant Lecturer, Secondary Training College, Bombay.

1. *Failures in Mathematics at the Matriculation Examination of the Bombay University* At the matriculation examination of the University of Bombay, mathematics has always been a compulsory subject and *all* students have always been required to study the same syllabus. The same tradition is still continued at the S.S.C. Examination which has now taken the place of the old matriculation. This uniformity of the curriculum did not have any serious consequences so long as only a few and superior children came to the secondary schools. But in the course of the last century, the number of children who attend the secondary schools has increased by leaps and bounds. At the first matriculation examination in 1859, only 121 students appeared; but in 1946, as many as 36,974 students appeared for the matriculation. This tremendous increase in the enrolment of secondary schools has brought in children who show a large variation in ability or interests in mathematics; and yet, the authorities compel all of them to study the same syllabus, to take the same tests, and to attain the same minimum standard for passing (35%). The result inevitably is that the percentage of failures in mathematics has been very high and is ever on the increase. The immense waste of time, money, and energy that such failures imply can easily be imagined.

Some idea of the magnitude of the problem can be had if the matriculation examination results for a few recent years are considered. The following table gives the total number of failures and the percentage of failures, in mathematics at the matriculation examination, since 1942 :—

TABLE No. I

Year	Total No. of Candidates appeared	No. of Candidates failed in Maths.	Percentage of failures
1942	27,825	5,456	19.60
1943	24,945	7,516	30.13
1944	30,610	8,771	28.65
1945	31,941	11,039	34.56
1946	36,974	8,308	22.46

Looking to these figures it is evident that the number of failures is increasing every year, except in 1946. This may be due to (as stated in the Chief Examiner's report) an easy paper being set in that year.

The following table gives the percentages of failures in different subjects at the matriculation examination from 1942 to 1946 :—

Percentage of failures

Subjects	1942	1943	1944	1945	1946
English ...	46.77	37.02	28.46	50.53	42.02
Language ...	19.88	18.73	21.14	23.54	22 48
History & Geography ...	23.88	19.30	17.11	25.09	22.09
Mathematics ...	19.60	30.13	28.65	34.56	22.46
Physics & Chemistry ...	20.16	13.30	14.45	28.29	20.04
Physiology & Hygiene ...	27.81	18.98	20.02	19.44	27.10
Botany & Zoology	13.20	20.00	32.00	33.33	20.37
Domestic Science	30.21	18.70	19.69	10.63	9.90
General Science ...	18.11	17.07	12.15	18.09	26.53

This table will help us to compare the failures in mathematics with that of other subjects, and it appears that almost for every year, the percentage of failures in mathematics is next to the percentage of failures in English.

The exact figures of failures in the years 1947 and 1948 were not available. But in order to have a rough idea about the total number of failures in these years also, I collected data from all the high schools of Belgaum and calculated the percentage of failures for the years 1947 and 1948. These results were corroborated by finding the percentage of failures of some of the candidates who appeared at Ahmedabad, Ahmednagar, and Navsari Centres during the years 1947 and 1948. Table No. 2 gives the details of these results :—

TABLE NO. 2

Year	Name of the centre	No. appeared		No. failed		Percentage of failures	Average percentage of failures for the year
1947	Belgaum ...	865	1,888	331	635	38.2	33.6
1947	Ahmednagar ...	494		156		31.6	
1947	Navsari ...	529		148		27.9	
1948	Belgaum ...	909	1,932	306	625	33.6	32.3
1948	Ahmedabad ...	1,023		319		31.18	

The actual numbers of candidates who appeared for the matriculation examination for the years 1947 and 1948, are 41,094 and 43,645 respectively and the average percentages of failures as calculated and stated in Table No. 4 are 33.6 per cent and 32.3 per cent. So the total numbers of failures in mathematics for the years 1947 and 1948 amount to 13,807 and 14,097 approximately ! This number is bound to increase rapidly in the coming years, if no attempts are made to improve the existing state of affairs.

2. *Analysis of the failures* : The causes for these failures in mathematics may be briefly stated as follows : —

(1) The present syllabus in mathematics is included for its disciplinary value rather than for the utilitarian. The average student, therefore, finds it much beyond his capacity.

(2) The minimum percentage of marks for passing in this subject is 35 which is rather high.

(3) The same syllabus is prescribed for all the students appearing for the examination.

(4) Under the present administrative system in secondary schools, pupils are huddled up in a class without any consideration to the differences in their mathematical ability, age or intelligence. In such heterogeneous classes, the same syllabus is taught during the same period with the same method of instruction. The content and method of teaching is not, therefore, adjusted to individual differences among the pupils and hence the efficacy of the instruction is affected.

(5) All the students appearing for the matriculation examination are examined by the same question papers, methods and modes of examination.

From the existing circumstances stated above, it is quite evident that the curriculum-makers are of the opinion that all the students studying the course and appearing for the examination during a certain year belong to one normal group and that the same papers and syllabus will suit all of them. To test this assumption, let us see whether the marks obtained by candidates at the matriculation examination in mathematics form a normal distribution.

Table No. 3 gives us frequency distribution of marks obtained in mathematics, in the years 1942 to 1948 by the students appearing for the matriculation examination from all the high schools of Belgaum : —

TABLE No. 3

Class Intervals	1942 Freq. Dist.	1943 Freq. Dist.	1944 Freq. Dist.	1945 Freq. Dist.	1946 Freq. Dist.	1947 Freq. Dist.	1948 Freq. Dist.
0— 19 ...	8	22	35	46	38	68	53
20— 39 ...	16	35	47	65	73	73	95
40— 59 ...	36	85	84	104	98	123	129
60— 79 ...	69	117	125	242	142	220	200
80— 99 ...	128	172	164	170	175	229	207
100—119 ...	123	104	113	84	175	148	178
120—139 ...	87	58	63	46	130	75	87
140—159 ...	45	34	32	23	63	28	37
160—179 ...	26	22	24	13	36	10	12
180—200 ...	5	6	6	4	14	6	8
	543	655	693	797	944	980	1,006

The *Chi* ^{2} *test* was applied to find the " goodness of the fit " for these distributions. The results are shown in the following table in a consolidated form : —

TABLE No. 4

Centre	Year	Mean of the mathematics marks (actual Mean)	Standard deviation with Sheppard's correction	Number of frequency group	Chi^2	The value of P as calculated from Pearson's table	Interpretation or conclusion
Belgaum	1948	81.47	36.74	19	79.25	.000000	Worst fit or no fit
	1947	79.52	35.8	19	33.6	(.002087)	Worst fit
	1946	92.24	40.5	19	19.5	Between (.037446) .391823	Good fit
	1945	76.71	34.7	19	184.67	.000000	Worst fit or no fit
	1944	86.02	38.9	19	27.94	.062055	Bad fit
	1943	88.26	36.6	19	41.15	.002087	Worst fit
	1942	101.92	35.0	19	24.18	.155028	Bad fit

N.B.—Unless the value of P be .2 or more the fit cannot be regarded as good.

The following table gives the frequency distribution of the marks in mathematics obtained by students appearing at the matriculation examination from some other centres during the years 1942 to 1948. The. results of the application of the chi ^{2} test to them are shown in Table No. 6 : —

TABLE No. 5

Name of the Centre	Ahmedabad	Baroda	Ahmednagar	Ahmednagar	Ahmednagar	Navsari	Ahmedabad
Year	1942	1943	1944	1945	1946	1947	1948
Class Intervals	Freq.	Freq.	Freq.	Freq.	Freq.	Freq.	Freq.
0-19	33	37	63	70	12	33	58
20-39	46	82	55	95	21	53	70
40-59	58	109	58	108	40	122	130
60-79	112	160	89	215	86	224	174
80-99	134	170	96	117	110	271	252
100-119	140	80	66	45	124	206	184
120-139	74	27	41	23	116	74	91
140-159	31	11	20	6	66	21	38
160-179	14	1	8	5	20	15	17
180-200	4	1	9	0	2	4	9
Total	646	678	505	684	587	1,024	1,023

TABLE No. 6

Centre	Year	Mean of mathematics marks	Standard Deviation with Sheppard's correction	No. of freq. group	Chi square value	The value of P as calculated from Pearson's table	Interpretation of the result
Ahmednagar ...	1942	88.73	37.4	9	18 9	.014860	Bad fit
Baroda ...	1943	72.42	31.4	9	16.84	.030109	Bad fit
Ahmednagar ...	1944	76.66	42.8	9	12 62	.111850	Bad fit
Ahmednagar ...	1945	64.65	31.8	9	54.71	.000000	Worst fit or no fit
Ahmednagar and Navsari	1946	101.48	35.4	9	10.80	.201699	Good fit
—do.— ...	1947	84.88	31.8	9	34.33	.000211	Worst fit
Ahmedabad ...	1948	84.47	36.8	9	23.94	.002292	Bad fit

Even a glance at the Tables 4 and 6, brings to our notice the important fact, that except for the year 1946, the fitting of a normal curve to each of the groups in question is either bad or worst. In three cases, there is no fit at all. This means that the distribution of frequencies in the group is not a normal distribution. The defect may be in the pupils' innate equipment or acquired knowledge and skills ; but whichever the defect may be, one fact is certain : the group is not normal. It is, therefore, educationally unsound to submit all the members of this group to the same curriculum and the same tests in mathematics.

The following two tables gives the consolidated results of the values of mean, median, mode, skewness and P for different groups shown in Tables 3 and 5 : —

TABLE No. 7

Belgaum Centre

Year	1942	1943	1944	1945	1946	1947	1948
Mean	101.92	88.25	86.02	76.71	92.24	79.52	81.47
Median	101.6	87.11	85.66	76.3	92.57	79 98	81.68
Mode ...	92.8	89.4	89.4	72.4	91.04	88.04	89.4
Skewness ...	.027	.093	.027	.035	—0.024	—0.038	—0.017
P ...	.155028	.002087	.062055	.000000	.391823	.002087	.000000

TABLE No. 8

Name of the centre	Ahmed.	Baroda	Aham. Nagar	A'nagar	A'nagar & Navsari	A'nagar & Navsari	Ah'bad.
Year ...	1942	1943	1944	1945	1946	1947	1948
Mean ...	88.73	72.42	76.66	65	101.48	84.88	84.47
Median ...	90.54	73.37	76.69	65.9	103.4	85.3	85.8
Mode ...	107.1	86.6	88.5	70.4	110.2	89.5	90.2
Skewness ...	—0.14	—0.09	—0.002	— 0.08	— 0.16	—0.039	—0.108
P.	.014860	.030109	.111850	.000000	.201699	.000211	.002292

Excepting the year 1946, " the close agreement of the mean and median would seem to indicate a high degree of symmetry in the distribution, but contrary to expectation the data of each of the groups do not furnish a good example of a normal probability curve as indicated by the value P given in the tables above ".* Every year there are two papers, one in Algebra and one in Geometry and Trigonometry, of 100 marks each, and thus the marks obtained by every candidate appearing at the matriculation examination are, out of 200. Hence the theoretical mean, median or mode comes to 100. But the second and the most important fact which is brought to our notice by the Tables 7 and 8 is, that for all the years, excepting the group of 1942 from Table 7 and of 1946 from Table 8, the mean, median and mode values lie below 100, the theoretical mean, median or mode for each of the groups. It is, therefore, quite clear that, whatever may be the reasons, the papers set are not suitable for the students appearing for the examination and that they are rather found difficult by the candidates.

The values of the mean, median and mode, given in tables 7 and 8 give us merely an idea of general trend of each group as a whole. But this information alone, is not sufficient for knowing the exact nature and characteristic of each of the groups under investigation. They do not give us any knowledge regarding the degree of scatter or dispersion and variability in the group. So I shall next proceed to find the dispersion and variability in these groups. The Quartile Deviation and the Coefficient of Variability was, therefore, calculated and is given in the following table : —

TABLE No. 9

Name of the Centre	Year	Quartile Deviation	Coefficient of Variability	
			Formula of Terry Thomas V = 100Q/Median	Pearson's Formula V = 100Sigma/Mean
Belgaum	1942	18.125	17.8	34.34
Belgaum	1943	22.365	25.7	41.4
Belgaum	1944	20.355	23.8	45.2
Belgaum	1945	20.2	26.4	45.2
Belgaum ...	1946	28.06	30.3	43.9
Belgaum ...	1947	22.545	28.2	45.02
Belgaum ...	1948	24.972	30.5	45.09
Ahmedabad	1942	25 06	27.6	42.1
Baroda	1943	22.46	30.6	43.3
Ahmednagar	1944	31.265	40.7	55.8
Ahmednagar ..	1945	21.6	32.7	48.9
Ahmednagar & Navsari	1946	25.55	24.7	34.8
Ahmednagar & Navsari	1947	21.05	24.6	37.4
Ahmedabad ...	1948	24.75	28.8	43.5

Mr. Terry Thomas says that " if V, the coefficient of variability is greater than 25 per cent, it means that the spread is rather big and the

* These remarks have been made by Holzinger in his *Statistical Methods* (p. 113) with reference to a survey of I.Qs. in Illinois. They apply literally to the present case.

results should be treated with caution ".* Looking to the coefficient of variation as calculated by Pearson's formula, it is indicated that all the groups from 1943 to 1948 are almost of the same nature and characteristic with a slight variation, comparatively negligible. But as suggested by Thomas, the spread for each group is rather big and hence I shall further investigate these groups by drawing the percentile or orgive curves for these groups.

The curve and histogram shown in Fig. 1 below are for Belgaum Centre (1948) and the curves in Fig. 2 are for the other centres (1944; 1945; and 1946):—

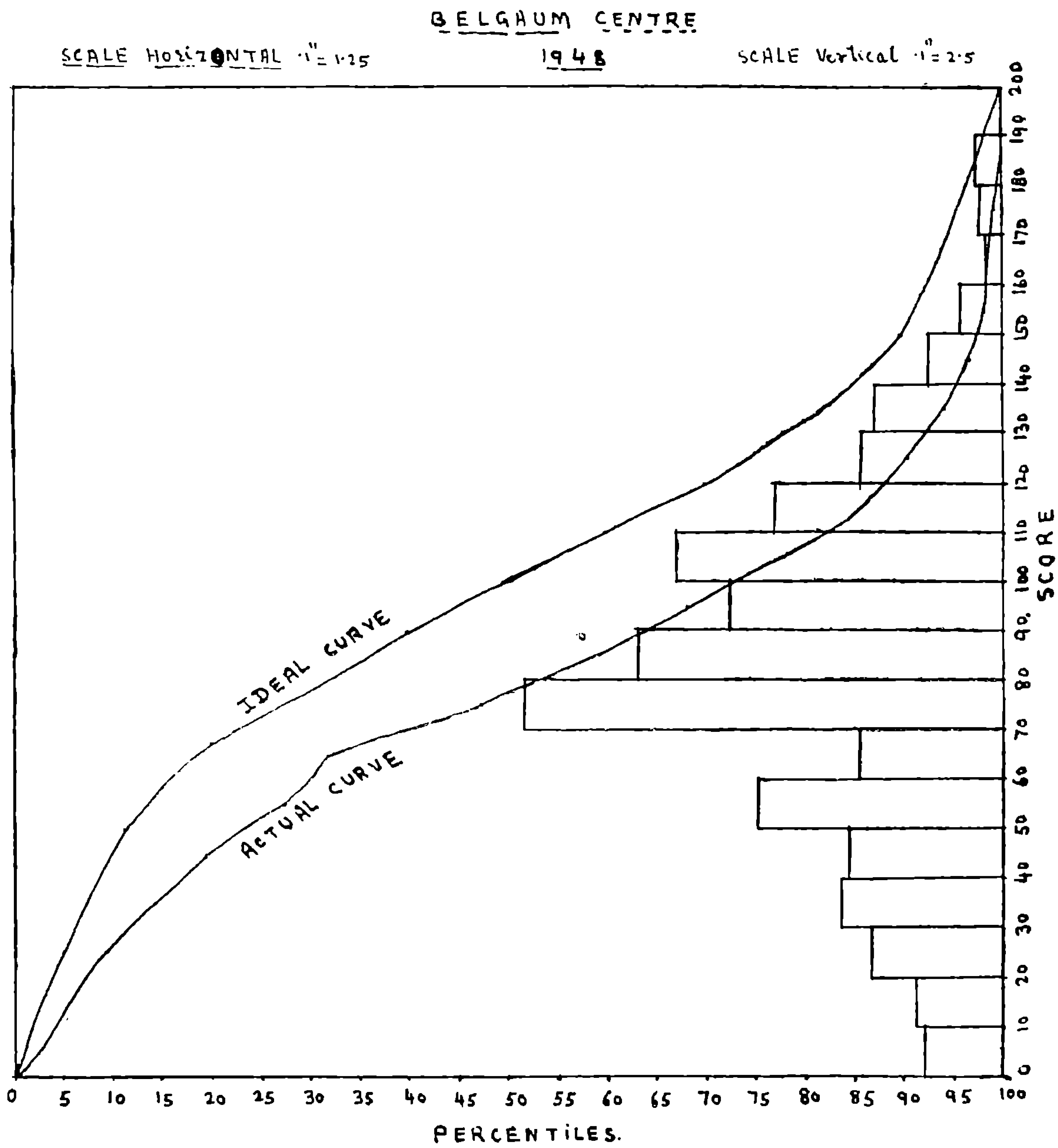

Fig. 1

* *Science of Marking*, p. 53.

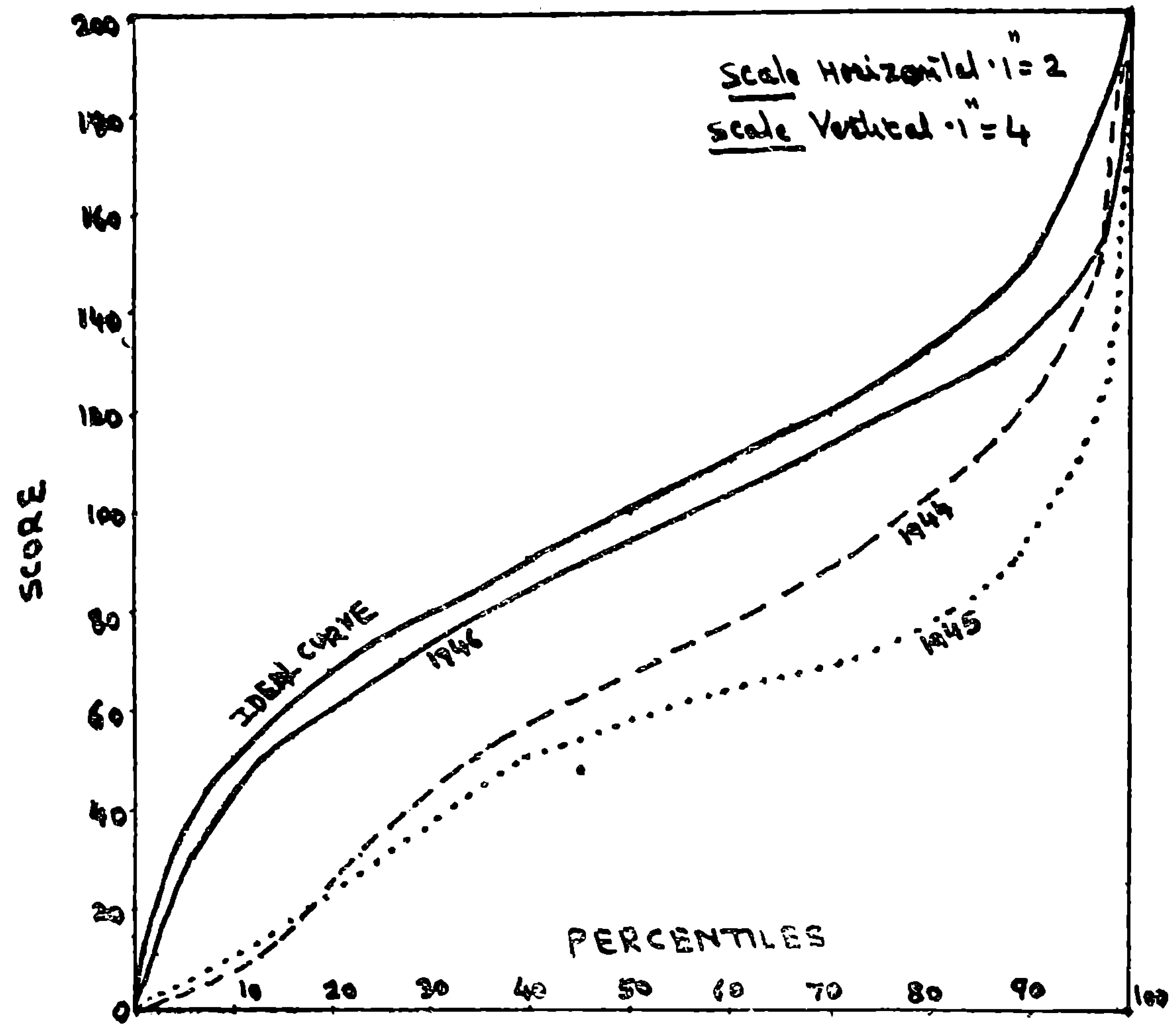

FIG. 2

Similar curves and histograms were drawn for all other years also in both the groups* and the following observations were made from them :—

Belgaum Centre

(Theoretical Median 100 ; Curves drawn from Normal curve on 5 σ Base)

TABLE NO. 10

(1) Year	1948	1947	1946	1945	1944	1943	1942
(2) Actual Median (as observed from the percentile curve)	77	76	89	72	81.5	82.7	97.5
(3) Percentage of students below half marks (less than 100)	72.5	78%	60.5	81.5	69.5	70.6	53.8

* These have not been reproduced here on financial grounds—*Editor.*

Other Centres

(Theoretical Median 100 Curves drawn from normal curve on 5 σ Base)

TABLE No. 11

Centre							
Year	1948	1947	1946	1945	1944	1943	1942
Actual median (as observed from the percentile curve)	77	74	94	59	68	64	82
Percentage of students below half marks (less than 100)	77	80	57	92	78	89	69

All the experimental curves fell below the percentile curve that would be found for an ideal or normal distribution of scores. Hence either mathematics was weaker than it should be, or the paper was too hard for the majority of the students. From the fact that the histograms for the years 1948, 1946, 1945, 1944, 1942 were trimodal, it was inferred that probably there are three distinct groups of candidates. Too many boys got low marks because of the fact that they were only able to do accurately a portion of the paper. Hence one paper was evidently not suitable for the great range covered and it would be better in future to set three papers—one higher, one mediocre, and one lower. The histogram for the year 1943 is bimodal, which indicates that there are two distinct groups of candidates ; but even here one of the groups contains as many as 32 per cent students who have failed in mathematics and for whom the present syllabus is quite unsuitable. These students form one separate group for whom the teaching of this subject should be looked upon from quite a different point of view. The existence of this group is indicated by the other histograms. Thus *it can be said that among the students of each year, there are three distinct groups of students and hence three courses of study in mathematics should be prepared for these three distinct groups.** Obviously it follows that all the candidates cannot follow the same syllabus in mathematics as it exists today. Hence a strong plea is made here for differentiation of syllabus for these three distinct groups.

3. *Factors involved in the achievement in mathematics*: The problem which immediately arises, therefore, is this : What should be the basis of these three different syllabuses ? This needs a careful consideration of the reasons which cause difference in achievement in mathematics.

(1) The first, and probably the most fundamental reason is intelligence. Here Prof. N. Kuppuswamy Aiyangar is quite right when, after

Cf. the Latin Grammar paper discussed by Terry Thomas (The Science of Marking, p. 91).

giving the views of both the old and modern psychologists, he finally concludes that " both the old and modern psychologists agree in the finding that mathematical ability depends not on any peculiarly specific inheritable talent. If it depends upon any inheritable talent at all, the talent is not specific as something applicable to the study of mathematics and mathematics alone, but mainly general Spearman's ' G ' (or Thorndike's intellectual curiosity) and the ability to deal with ideas and symbols of all sorts ".* This is further borne out by the fact that any test of intelligence of any repute, contains at least a few examples in arithmetic. The following table gives the analysis of eleven different intelligence tests of repute :—

TABLE No. 12

Name of the test	Total number of items to be answered in the test of intelligence	Total number of items based on mathematical knowledge
1. Otis group intelligence scale. Advance examination Form A ...	230	40
2. The simplex group intelligence scale ...	183	65
3. National Intelligence tests Scale A. Form 2 ...	106	16
4. National Intelligence tests Scale B. Form 2 ...	164	22
5. Northumberland Mental test No. 1 ..	59	19
6. Cattell Intelligence tests ...	127	13
7. Moray House Test 11-A (By Prof. Thomson) ...	75	9
8. Moray House Test 10 (By Prof. Thomson) ...	100	25
9. The West riding tests of Mental ability. Set Y ...	178	15
10. Burt's Northumberland standardised tests of general intelligence ...	307	10
11. The Northumberland Mental Test 2 by Thomson	95	58

Moreover, the present syllabus in mathematics consists largely of problem solving and computation work. It comprises four branches, namely, (1) Arithmetic, (2) Algebra, (3) Geometry, and (4) Trigonometry. The study of each of these branches ultimately leads to problem-solving—an aspect highly connected and governed by intelligence. Hence the achievement in any of the branches of mathematics in particular or mathematics in general will depend upon the intelligence of the individual studying the course.

All the above discussion suggests that Intelligence (i.e. I.Q.) will bear a good positive correlation with the achievement in mathematics ; and if it is proved to be so, it can safely be taken as the basic principle for differentiation of the present syllabus in mathematics for the three distinct groups whose existence was proved in the last section.

* *The Teaching of Mathematics in the New Education,* p. 59.

(2) I will now turn to the second important factor on which the achievement in mathematics depends and that is "interest". In order to study this factor, a simple questionnaire was given to students of classes I to VII of different high schools in Belgaum and they were asked to number the seven subjects they had studied in the schools, in descending order of preference. They were to give number one to the subject they liked most and number seven to the subject they liked least. They were also asked to answer three questions :—

Question 1 For what time in a day or in a week do you study mathematics at home ?

Question 2 If you have any difficulty in mathematics is there anybody, at home, to help you to get your difficulty solved ?

Question 3 Are all your difficulties in mathematics solved either by your teacher or by anybody else ?

Table 13 gives the details of the data collected in so far as the position of mathematics is concerned :—

TABLE NO. 13

Standard	Position of Mathematics							Total No. of Replies
	1st No. of Students	2nd No. of Students	3rd No. of Students	4th No. of Students	5th No. of Students	6th No. of Students	7th No. of Students	
I ...	37	55	22	36	25	17	14	206
Percentage ...	17.9	26.7	10.7	17.5	12.1	8.3	6.8	
II ...	74	98	58	46	31	27	20	354
Percentage ...	20.9	27.9	16.3	13	8.7	7.6	5.6	
III ...	67	78	66	40	37	39	28	355
Percentage ...	18.9	21.9	18.5	11.3	10.5	10.9	8	
IV ...	82	65	57	42	40	36	36	358
Percentage ...	22.9	18.2	16	11.7	11.2	10	10	
V ...	52	56	60	52	45	39	51	355
Percentage ...	14.7	15.9	16.9	14.6	12.7	10.9	14.3	
VI ...	48	59	41	33	27	35	48	291
Percentage ...	16.5	20.3	14.1	11.4	2.3	12	16.4	
VII ...	46	37	24	28	25	17	22	199
Percentage ...	23.1	18.5	12	14	12.5	8.9	11	
Total ...								2,118

It was assumed that the subject is popular among students if it has been assigned positions I and II and is unpopular among them, if it has been placed in the positions VI and VII. The placement of mathematics in the three middle positions (i.e. 3rd, 4th and 5th) indicates that it is neither popular nor unpopular among the students and such students will do well with the subject if they are made to work. Table 14 compares the percentages of students belonging to these three groups :—

TABLE NO. 14

Standard	Percentage of interested students	Percentage of neutral students (with respect to interest in mathematics)	Percentage of students finding no interest in mathematics
I	44.6	40.3	15.1
II	48.2	38	13.2
III. ...	40.8	40.3	18.9
IV	41.1	38.9	20
V	30.6	44.2	25.2
VI ...	36.8	34.8	28.4
VII	41.6	38.5	19.9

It seems that in lower classes (i.e. I and II) about 45 per cent of the students find mathematics interesting. This may be due to the fact that, in these standards, only arithmetic involving problems related to life are mainly taught. In standards III and IV, the percentage of interested students is lowered down to 40. This may be due to the inclusion of harder problems and inverse cases in arithmetic, and introduction of new branches like Algebra and Geometry. In standards V and VI the popularity of the subject is reduced to nearly 35 per cent. The probable reason seems to be that the students now deal with more abstract ideas and are expected to reason for themselves more than previously. In standard VII, the percentage of interested students seems to be increased. This may be due to the small sample (i.e. 199 only) under investigation. Coming to the second group we see that about 40 per cent of pupils have neither an interest nor a dislike for the subject. Their achievement in the subject will, therefore, depend upon how the subject is presented to them by the teacher and how they are made to work at it. The real job of the teacher lies with these students and it is he who will create a like or dislike for the subject. About 20 per cent of the students in all the classes have a dislike for the subject and it is very difficult for the teacher to teach the present syllabus to them. Concrete problems from different situations in life alone appeal to most of them and they are reluctant to do abstract thinking and to work with topics having no direct bearing on everyday life. It is for these students who, for some reason or the other, have taken a dislike for the subject, that a simpler syllabus based on the utilitarian value of mathematics should be framed. The present syllabus is quite unsuitable to this class of students at least.

I shall now pass on to analyse the answers of the three questions put to the candidates. As for time devoted for the study of mathematics at home the details are given in the following table —

TABLE No. 15

Standard	Total No. of cases	Total No. of hours	Average per day
I ...	198	103	31.3 minutes
II ...	342	148	26 minutes
III ...	351	146	25 minutes
IV ...	357	278	46 minutes
V ...	352	292	49.8 minutes
VI ...	291	318	1 hour 7 minutes
VII ...	199	214	1 hour 4 minutes

For Question No. 2 in 1,296 cases it is observed that there is nobody to help the student at home to get his (mathematics) difficulties solved.

For Question No. 3, 694 students have stated that all their difficulties are solved from time to time, 1,203 students have stated that " sometimes they are solved, sometimes not ", 244 students have stated " not solved " and some students have not answered the question.

From the response of Question No. 2 it is quite clear that in a majority of the cases, there is nobody to help the candidates at home and they solely depend upon their mathematics teacher ; and from the responses collected for Question No. 3, it is clearly seen that many difficulties of the students, in mathematics, remain unsolved. This affects their progress in the subject. Mathematics is a sequence subject ; and it is not easy to understand a topic when the topics that have gone before are not properly grasped.

Interest in mathematics can be created or marred by a good or bad teacher of mathematics. But even in this respect, the existing position is far from satisfactory. A very common practice followed by schools is to assign a class in mathematics to a teacher who has had no special training in the subject and whose interests lie elsewhere, because he or she happens to have a vacant period at the time. The principle underlying this practice apparently seems to be that anybody can teach mathematics by simply following a text-book and devoting ninety per cent of the time to drill in algebraic manipulation or memorisation of theorems in Geometry. In this connection, I collected datum from almost all the teachers teaching mathematics to different standards from I to VII in different High Schools of Belgaum. It showed that there are about 92 teachers who are teaching mathematics. Out of them, 13 are graduates with mathematics as their principal subject and have secured a degree in teaching. Two are graduates with mathematics as the principal subject and a certificate of teaching. Twenty-six trained graduates have taken mathematics as one of the subjects for their degree or diploma course in teaching. Twelve trained and untrained graduates who had neither mathematics at their degree course nor at their teachers' training course are handling the subject as a necessity of the school. Twenty-one are under-graduates with a certificate of teaching and eighteen are

under-graduates. This is not a happy picture at all. Moreover, it was found that many teachers had no liking for mathematics ; but still they were teaching the subject for the need of the school. The classes handled were heterogeneous with respect to 'Mathematical Ability' (i.e. Spearman's 'G') so that it was impossible for any teacher to adopt any suitable method for teaching. Almost all the teachers found it difficult to pay individual attention to students and even though they assigned home-work on all topics, they could not go through it personally. All of them stated that they had no time to prepare the necessary aids. Under such circumstances, it is no wonder that 'interest' in mathematics is often left undeveloped and progress in achievement is marred by bad, poor or indifferent teaching.

(3) The third factor on which the achievement in mathematics depends is the time devoted for the study of the subject. It is observed in some cases that even a student who is quite intelligent and interested in mathematics is still unable to secure a good number of marks in the subject. This is due to the peculiar and pecuniary circumstances at home. Many practice lessons on the regular work done in the schools are given as home-work ; and if they are not properly attended to, the total score in mathematics is likely to be affected. Thus in some cases students who are quite intelligent and interested in mathematics fail to score a good number of marks for want of attending the practice lessons given at home.

(4) The last factor on which the attainment in mathematics depends, is the medium of instruction. It is commonly agreed that the subject is well understood, if explained in the mother-tongue ; and in many cases it is observed that students fail to solve a question correctly only because they have not understood the problem correctly and, if explained in their mother-tongue, they are able to solve it.

From the above discussion it will be seen that the attainment in mathematics depends upon the general intelligence, interest, time at one's disposal, teacher, aids and methods used while teaching, and medium of instruction. It is also well known that, under the present system of school organisation, the classes have become heterogeneous. Heads of schools do not take into account the individual differences that exist among students so that the teaching, even at the hands of the skilful teacher, suffers both in quality and quantity. But it is possible to control, to a certain extent, all the other factors, except that of "General Intelligence" Hence the differentiation of the syllabuses for mathematics, for three different distinct groups, should be made on the basis of intelligence level.

4. *Intelligence and Achievement Tests* : The next step in the investigation was naturally to test the intelligence of the students as well as their achievement in mathematics so as to collect the basic data necessary for their grouping. As a first step in this direction, I tested intelligence. For this purpose, I used Thompson's Northumberland Mental Test No. 2 adapted into Marathi by Mrs. N. Samarth of Bombay. This

was administered to 775 students of the matriculation class. The scoring method of Mrs. Samarth was used to mark the scripts and the I.Q.s were calculated with the help of the ready reckoner prepared by her. The results are shown in the following table :—

TABLE No. 16

Class Intervals	Total No. of Students
Below & 70–74	57
75–79	49
80–84	90
85–89	103
90–95	65
95–99	76
100–104	73
105–109	65
110–114	56
115–119	38
120–124	47
125–129	28
130–134	19
135–139	5
140–144	3
145–149 & above	1
Total	775

As shown by the above table, I had administered the intelligence test to 775 students of matriculation class of the year 1947-48, from 15 high schools of Belgaum, Poona and Ratnagiri. Out of these, 738 students appeared for the matriculation examination. Out of the remaining 37, some appeared for the S.L.C. examination and some were not sent up. I then collected the marks obtained in mathematics papers of the university matriculation examination by all the students who had undergone the intelligence test. Thus all the students were tested by the same test of intelligence and the same set of question papers in mathematics. It is true that the answer books of these students were assessed by different examiners but from the nature of the examination arrangements it can be assumed that the assessment made by different examiners was uniform. The correlation between the I.Qs. and the marks obtained in mathematics was calculated by the product-moment formula and found to be .58. The P.E. of r was .064.

The next step in my investigation was to test the achievement of students in mathematics. For this purpose, I was unable to use the university matriculation results because there is no paper in arithmetic and separate marks in Algebra and Geometry are not available. Hence I decided to administer some achievement tests in Geometry, Algebra and Arithmetic to the students who had undergone the intelligence test and to work out the correlation between their results and I.Qs.

(*a*) *Achievement Test in Geometry* : My object was to find and compare the achievements in Geometry of students of different mental

abilities. So I examined some of the achievement tests in plane Geometry and selected the items for my test. Some of the tests I examined and found suitable for my purpose are : —

(1) *Scoring* : Sanford Achievement Test in Plane Geometry—Form A and B

(2) Orlean's Plane Geometry Achievement Test ; and

(3) Roger's Test of Mathematical Ability.

The important factors on which attainment in Geometry depends are : (1) drawing conclusions from given data ; (2) judging the correlations of conclusions ; (3) analysing constructions ; (4) computation ; (5) completing proofs ; and (6) diagrams. Different items for these six factors and for complete proofs, suitable to our students and to the subject-matter of our present syllabus in Geometry and Trigonometry, were drawn from the three achievement tests mentioned above. As the test was intended to cover the whole syllabus in Geometry, it was given after the completion of the prescribed course in Geometry. It was set in English as the subject was taught through English in all the high schools. Two items of trigonometry were added from the initial or introductory part as all the high schools were not expected to cover the whole syllabus in Trigonometry by the time the test was to be administered. The following table gives the distribution of time : —

TABLE NO. 17

Part	Items	Title of the Test	Time
1	8	Drawing conclusions from given data	10 minutes
2	10	Judging the correctness of conclusions	8
3	11	Analysing constructions	12
4	10	Computation	10
5	4	Completing proofs	10
6	4	Diagrams	10
7	5	Proofs	15 ,,
		Total	75 minutes

579 students were tested in total. Out of these, 536 students were found to have appeared for the intelligence test. By using the product-moment formula, it was found that the correlation between the I.Q's and the test score in Geometry was .58 and that the P.E. of r was .019.

(b) *Achievement Test in Algebra* : This test was divided into two parts : the first part consisted of 26 problems, graded in difficulty, of which the students were asked to prepare the equations only, using the symbols given (in the bracket) at the end of each problem. The second part contained eleven selected simple, simultaneous and quadratic equations formed from some of the problems of Part I, mixed together and graded in difficulty. The problems were selected from Columbia

Research Bureau Algebra Test 1-A and 2-A and from some of the text-books in Algebra. The test was designed to be given at the end of Algebra course of the secondary schools and hence problems covering the whole subject-matter of the syllabus in Algebra were selected. As this subject also was taught in English in all the high schools, the test was prepared in English only and was administered when all the students had completed the course prescribed.

664 students were tested in all, out of whom 623 students were those who had taken the intelligence test. By the product-moment formula, it was observed that the coefficients of correlation between I.Qs and Algebra test, I.Q's and preparing equations for problems (i.e. Part I of the test) and I.Q's and skill in computation of the Algebraic equations (i.e. Part II of the test) were .57 $\pm$ .018, .597 $\pm$ .017 and .301 $\pm$ .002 respectively.

(c) *Achievement Test in Arithmetic* : I will now turn to the arithmetic test given to the students. I studied a number of arithmetic tests compiled by different authors and found the arithmetic test by Chatterji and reasoning test in Arithmetic by Chakravarty to suit my purpose. The problems of my test were taken from both of these tests and from arithmetic text-books. As finally drafted, the test was divided into two parts. The first part consisted of 30 Arithmetical Reasoning Problems. The second part included some 25 examples in mechanical arithmetic. Some of the examples from mechanical arithmetic were formed from some of the problems included in Arithmetical Reasoning. This test also was prepared in English.

561 students were tested in all. Out of these, 532 were those who had appeared for the intelligence test and hence their scores alone were taken into consideration for finding the correlation with I.Q's. Many students refused to take this test on the ground that they have completely forgotten arithmetic taught previously. By the product-moment formula, it was found that the coefficients of correlation were as follows :—

(1)	I.Qs and Arithmetic Test scores	.588 $\pm$ .0189
(2)	I.Qs and Arithmetic Reasoning (Part I)	.57 $\pm$ .0196
(3)	I.Qs and Computation of Examples (Part II)	.46 $\pm$ .0228

To find the validity of each of the Geometry test, the test scores were correlated with the marks obtained at the preliminary examination in the respective subjects in the case of 182 students of the N.M.V. High School. The coefficient of correlation was found to be .71 with a P.E. of .024. To find the validity of the Algebra test, the test scores were similarly compared with the marks obtained in Algebra at the preliminary examination by 204 students of the N.M.V. High School. The correlation coefficient was found to be .56 with a P.E. of .032. The present University syllabus in mathematics does not include arithmetic as a subject for matriculation examination class and no examination in this branch is held for these students. This offered me a difficulty in finding the validity of the arithmetic test. Two teachers (in consultation with each other) who had taught arithmetic previously to the students (now belonging to the

matriculation class of the Sardar's High School) were, therefore, asked to rank the students according to their impressions of their arithmetical ability and their ranking was compared, with the ranks obtained in the arithmetic test scores. Two correlation coefficient of the teachers' estimates and the test scores in arithmetic by the *rank rule* method was found to be .78 ± .0504.

All the preceding results are shown in the following table in a consolidated form :—

TABLE NO. 18

Names of subjects of Correlation	No. of cases taken for finding correlation	Coefficient of correlation	P.E. for correlation coefficients	Method used
1. I.Qs and the University Maths. marks ...	738	.58	.064	Product-Moment
2. I.Qs and Geometry Test scores ...	536	.58	.019	do.
3. I.Qs and Algebra Test scores ...	623	.57	.018	do.
4. I.Qs and Algebraic Problems Test scores (Part I) ...	623	.597	.017	do.
5. I Qs and computation of Algebraic equations Test scores (Part II) ...	623	.301	.002	do.
6. I.Qs and Arithmetic Test scores ...	532	.588	.0189	do.
7. I.Qs and Arithmetic Reasoning Problems (Part I) ...	532	.57	.0196	do.
8. I.Qs and Computation of Examples (Part II) ...	532	.46	.0228	do.
9. Combined Test scores of Algebraic and Geometry and University marks in Mathematics ...	497	.788	.011	do.
10. Geometry Test scores and Geometry marks at the Preliminary Examination by N.M.V.H. students ...	182	.71	.024	do.
11. Algebra Test scores and Algebra marks at the Preliminary Exam. by N.M.V.H.S. students ...	204	.56	.032	do.
12. Arithmetic Test scores and Teacher's estimates of the Arithmetic ability of the students of S.H.S. Belgaum	30	.78	.0504	Rank rule
13. I.Q. groups and the average marks obtained in Maths. at the matriculation examination by students falling in that group ...	738	.98	.0069	do.

From the above table it is quite clear that the different tests used are quite reliable and valid and that they will help in suggesting the differentiated syllabus in secondary school mathematics on the basis of intelligence level.

5. *Grouping of Students*: The next step, therefore, is to divide the students in three groups on the basis of the intelligence level. This problem requires further and more elaborate investigation and hence could not be pursued in detail. As a tentative hypothesis, however, it is suggested that the three groups should be as follows :—

Superior Group	I.Q. 115 and above
Average Group :	I.Q. 90 to 114
Below-average Group	I.Q. of less than 90.

It would, however, be wrong to group the students on the basis of the I.Qs alone. It is absolutely essential to qualify the findings of the intelligence test by those of prognosis tests in algebra and geometry.

6. *Proposed Curriculum* : Finally, I shall now proceed to propose a separate curriculum for each of these three groups of students.

(a) *Compulsory Course* : To begin with, I shall take up the problem of the *compulsory course* in mathematics. The principles followed in preparing the curriculum were :—

(1) The objectives of the course were mainly derived from 'Job-analysis' or 'Activity-analysis'.

(2) All the parts of the curriculum and the extent of every topic included in the curriculum were so selected as to be within the comprehension of the students studying the course.

(3) Topics which are necessary for the better understanding of the other school subjects especially science (i.e. topics in practical mathematics) were included.

(4) All superfluous, abstract, and merely technical matter was eliminated and emphasis was placed on all topics that are frequently applied in day-to-day life.

(5) Purely formal work was reduced.

(6) Problems of social significance were added : the treatment of banking, insurance and other such topics which give an idea of the business affairs was included in the curriculum ; statistics and graphs were included to give the pupil skill in representation of facts, etc.

(7) A number of the topics recommended for complete elimination were scrutinised with a view to determine whether the topic itself is wholly undesirable or whether there should be a different objective in its teaching than was formerly obtained. For example, it is unnecessary for a pupil to perform tedious examples in the compound interest ; yet he should know the meaning of the method and its significance in banking, and also know that banks do their computing by means of tables previously prepared.

In brief, a curriculum consisting of items rendered useful on the principle of 'social utility' and determined by an impartial and penetrating examination of the mathematical needs of competent living was pre-

pared for this *compulsory course* in mathematics. It is casted, in the main, in terms of what the adults do and what would be useful for adults to do. It was determined, not only by the practices of yesterday and today, but also by those of tomorrow.

The curriculum in mathematics for this *compulsory course* was thoroughly discussed in a meeting of six experienced teachers of mathematics and it was decided that this *compulsory course* should consist of—

(1) Arithmetic ;

(2) Elementary Algebra ; and

(3) Elementary Experimental Geometry.

The following is the curriculum in detail proposed for the *compulsory course* : —

ARITHMETIC

The four fundamental rules of addition, subtraction, multiplication and division, tables of weight, capacity, money (Indian and English), linear measure, time, numbers (dozen, score, etc.), method of looking into ready reckoners that are used in business should be thoroughly mastered. Knowledge of some square and cubic measures as are in practice today is essential. Tables of foreign money (England and America), simple factors and prime numbers, G.C.M. and L.C.M. (of not more than three numbers, each less than hundred and having simple prime factors. Factor method should be taught for finding G.C.M. and L.C.M.), simple common fractions (addition, subtraction, multiplication and division), (Fractions with large or unusual denominators and having little practical significance should be omitted), Decimal fractions (reductions of decimals to common fractions and common fractions to decimals below thousandths only), Decimal fractions addition and subtraction with not more than three decimal places, Multiplication and division with not more than two decimal places, Practice (simple), Ratio and simple proportion (within the ability of fractions to satisfy), Rates and taxes (elementary principles), Bankruptcy (examples of simple type), averages and percentages (examples of simple type), Alligation (examples of simple type, e.g. mixing tea of two kinds in the given proportion and finding the C.P. of the mixture ; calculating S.P. when C.P. and per cent profit is given), fellowship or partnership (simple illustrations leading to an explanation of the modern stock company).

Metric System (Addition and subtraction), simple interest (finding interest on the given amount for the given period at the given rate of interest only), compound interest as calculated by ready reckoner, calculating compound interest with special significance in banking and computing interest by means of tables specially prepared), time, work and speed (not complicated cases), square root (only by factorising of numbers less than one thousand); mensuration (areas of triangles, circles, ractangles and parallelograms), volumes (of rectangular solids, cylinders and spheres), profit and loss (easy examples, as far as possible this

should not be treated as a special topic but should be developed along with the other topics wherever possible), Graphs (statistical and other types found in the business fields), stocks and shares (elementary ideas and simple examples based on sale and purchase including brokerage), native accounts, knowledge of the transactions in the banks (such as cheques, notes receipts, statements), price lists and other business forms such as 'Rekha Ganit' (addition and subtraction), exchange (simple examples of direct exchange), debentures and Government securities (elementary knowledge), Book-keeping and accounts (elementary knowledge of methods of recording simple transactions of bills of exchange through journal and properly ruled bill receivable and bill payable books, methods of business payments, postal orders, money orders, cheques, bank drafts and bills of exchange, inland), Indian accountancy and main items of book-keeping (knowledge of credit (jama) and debit (Udhar), ledger accounts (khate), date according to Indian calender (Miti), amount and particulars, knowledge of kacha account books, kacha mel and tanchan (note), kacha nond, Ankda Vahi and Kacha khata vahi, Pucca vahi).

ELEMENTARY ALGEBRA

Teachers of Physics find some of the topics of algebra quite essential in the teaching of Physics. The burden of giving this knowledge lies on mathematics and hence the inclusion of elementary algebra forms an essential part of the compulsory course. The following are the topics which are found useful and hence included in the course.

(1) Letters to represent numbers (abbreviations), notation ax, $4bc$, etc., very simple exercises as $3ax + 5ax =$, $16mp \div 8 =$, meaning of formulas, translation into formulas ; brackets (insertion and removal of brackets not more than two brackets), simple problems and equations (simple), directed numbers (addition, subtraction, multiplication and division), addition and subtraction of simple algebraical expressions, simple cases of multiplication and division of algebraical expressions (complex cases of multiplication and division of Polynomials by Polynomials should be omitted), H.C.F. and L.C.M. (simple examples by the method of factorisation), simple factors—(i) of the type of expressions in which each term has a common factor, (ii) factors by arranging terms in suitable groups, (iii) factors of the expressions of the form $a^2 + 2ab + b^2$, (iv) factors of difference of two squares, (v) sum and difference of two cubes, (vi) factors of the expressions of the form $x^2 + qx + y$ and $px^2 + qx + r$; simple fractions addition and subtraction (not having quadratic or cubic denominators), simple simultaneous equations involving two unknown quantities, simple quadratic equations (based on the method of factorising), simple problems leading to simple, simultaneous and quadratic equations.

ELEMENTARY GEOMETRY

Very few facts in Geometry are found useful in practical life. Excepting for mensuration in arithmetic and for some algebraical for-

mulas the principles and facts in theoretical Geometry cannot be applied in the other school subjects. Excluding some properties of some regular figures its application is rarely found useful in everyday life. It is observed that the logical proofs of the major part of theoretical Geometry are beyond the grasp of students of I.Q.s less than 90. Again these facts of Geometry are easily learnt by the experimental methods and hence the course contains experimental proofs of the facts that are found useful in life.

EXPERIMENTAL COURSE — PRACTICAL GEOMETRY

Elementary knowledge of different types of solids, surfaces, lines, point, measurement of lines; surfaces (plane and curved of certain regular solids as cylinder, sphere), horizontal and vertical lines; horizontal and vertical planes; drawing different types of angles and measuring them; angles at a point; parallels; angles of rectilineal figures (triangle and other rectilineal figures), elementary constructions on triangles; congruent triangles; elementary constructions of quadrilaterals, different kinds of quadrilaterals, properties of parallelograms, properties of triangles, measurement of area unit of area, area of a rectangle and some other regular rectilineal figures and circle, the cylinder and the sphere, Loci of (i) a point always moving at a certain fixed distance from a given point, (ii) a moving point placed at the same perpendicular distance from a given straight line, (iii) a moving point such that it is equidistant from the two given fixed points, (iv) a moving point, always equidistant from the two intersecting straight lines, elementary idea of symmetry, with reference to rect. figures), reading of village maps and toposheets; need for 'large' and 'small scale', representative fraction (simple examples), relation of area of plan and plot, choice of scales, exercises dealing with the application of the principles of right angles, triangles and rectangles (the use of an ordinary compass and ruler is recommended for the exercises), determination and verification of horizontal angles with a simple theodolite is recommended for the exercises.

The following exercises are suggested.

(1) Walk 5 times along a chain length and ascertain your average pace.

(2) To determine the distance between two given points by pacing.

(3) To determine the position of a given point P, from the given line AB, by method of triangles, i.e. measuring AB, AP and BP and plot it.

(4) Lay out with a tape and string a square 16′ side.

(5) Line out for the position of a building 20′ x 20′ inside dimensions, with thickness $1\frac{1}{2}$ feet with tape and string.

(6) Laying out a rectangle, an equilateral triangle and an isosceles triangle with a tape and cross staff.

(7) To determine the distance of an inaccessible point from the given point.

(8) To determine the width of an inaccessible nala at a given place by the method of (*a*) equal right-angled triangles and (*b*) similar right-angled triangles.

(9) Locate the position of a given building with reference to a given road.

(10) Laying out of plots of the given areas and having paths between them.

(11) Determine approximately the areas from a village map.

(12) To determine the length of a given field boundary from the map.

(13) A man has to go from point A to point B along a given road or a nala course shown in the village map. State the length he will have to walk and also the direction in which he will have to move.

(14) Construction of simple scales to represent 1 inch 5 feet, 1 inch 20 feet, etc.

(15) Measure and plot your school building and determine the area of each room and verandah.

EXPERIMENTAL COURSE IN THEORETICAL GEOMETRY

The following propositions should be proved by experimental methods :—

(1) Theorems of angles at a point ; (2) Parallel straight lines and a transversal ; (3) Four cases of congruency of triangles ; (4) The exterior angle of a triangle and its relation with the interior opposite angles ; (5) Properties of isosceles and equilateral triangles ; (6) Property regarding the sum of any two sides together greater than third ; (7) Straight line joining the mid-points of any two sides is parallel to and half of third side ; (8) Greater side has greater angle opposite to it ; (9) Properties of parallelogram (regarding sides, angles and diagonals) ; (10) Circle (theorems of arcs and chords of circles, perpendiculars drawn from centre to chords), very simple original exercises based on the above facts (proved experimentally) regarding triangles, parallelograms and circles.

The following problems (to construct figures satisfying certain given conditions) (statement of the construction and proof not necessary) should be taught.

(1) At a given point in a given st. line to make an angle equal to a given angle.

(2) To draw a st. line parallel to a given st. line through a given point out-side the line.

(3) To bisect a given angle.

(4) To bisect a given st. line (at right angles).

(5) To draw a st. line perpendicular to a given st. line—

(i) at a given point in it, and

(ii) from a given point outside the line.

(7) To draw a circle passing through three points, not in the same st. line.

(8) To bisect a given arc of a circle.

There shall be two papers of three hours of 100 marks each. The first paper shall contain only arithmetic and the second paper, algebra and geometry. The time and marks of the second paper shall be divided equally in algebra and geometry.

This coure shall be studied by all the students of I.Q's less than 90, by students who for some reason or the other have a dislike for this subject and by girls studying in the secondary schools (Girls having special liking for Mathematics may be permitted to take 'optional' or 'special' course according to their abilities) (Girls studying science other than physics and chemistry need not study the subjects from second paper).

I shall next proceed to prepare a curriculum for 'Optional course' for the students of I.Q. group 91 to 115.

(b) *Optional Course* : The principles followed in suggesting the curriculum are—

(1) That the contents will have the practical, preparatory and disciplinary values ;

(2) That it will be within the comprehension of the students of I.Q. Group 91 to 115 ; and

(3) That the topics with their extent should be such as are commonly recommended and included in the syllabuses that are now existing.

The following is the syllabus in detail proposed for the 'Optional Group'. It consists of (1) Arithmetic, (2) Algebra, and (3) Geometry including Trigonometry.

Arithmetic The syllabus in Arithmetic is the same as that prescribed for 'compulsory course' Some difficult examples on each topic may be taught to the students but in all the cases 'inverse type of examples' should be omitted.

Algebra : Simple equations, easy factors, simple fractions, simultaneous equations of the first degree in two unknowns (with numerical coefficients) easy numerical quadratic equations (by factorisation), easy problems leading to the above types of equations, Highest common factor, and L.C.M. (both by easy factorisation) Square root (by factorisation), (easy examples,) Graphs of $y = ax + b$; and $y = kx^2$ (a, b, k having numerical values), Ratio, proportion, variation (simple examples with special reference to the problems in practical life).

(*N.B.*—Problems and examples in computation of a complicated nature shall be omitted.)

The following types of examples should be omitted from different topics in algebra : —

(i) Factors based on remainder Theorem, Homogeneous, symmetrical and cyclic expression, and of the $x^3 + y^3 + z^3 - 3xyz$.

(ii) H.C.F. and L.C.M. (Harder type and theorems and examples based on them).

(iii) Complex fractions and easy fractions based on factors on remainder theorem, Homogeneous, symmetrical and cyclic expressions, Square Root (omitting questions on finding the values of a, b, c, etc. in order that the given expression may be a perfect square or what should be added or subtracted etc. . .).

(*N.B.*—Stress should be given on problem-solving rather than computational work alone. Skill, speed and accuracy in doing computational work should be developed to an extent of helping problem-solving as an end in view).

GEOMETRY *Practical Geometry* All the Geometry course recommended for compulsory course.

Theoretical Geometry The syllabus in 'theoretical geometry' will contain all the theorems, included in Schedule 'B' of the present syllabus except the following items : — (i) Concurrency theorems; (ii) Tangent theorems and theorems on rectangles formed by intersecting chords; (iii) Identities and extension of Pythagoras' and Appolonius; (iv) Similar triangles: The ratio of the areas of similar triangles is equal to the ratio of the squares on corresponding sides; and (v) Construction of triangles from the data of complicated nature (i.e. given the difference of two sides or Perimeter etc.).

TRIGONOMETRY (i) Definition of sine cosine, and Tangent of an acute angle; and (ii) Simple problems of heights and distances.

(Simple original exercises on all the theorems included in the above prescribed syllabus.)

The students will be examined by three different papers—One in Arithmetic, one in Algebra and one in Geometry and Trigonometry—of three hours' duration and carrying 100 marks each.

(c) *Special Course* (For students of I.Q's above 115). This course includes (*a*) Algebra, (*b*) Pure Geometry, (*c*) Plane Trigonometry, (*d*) Mechanics, (*e*) Elementary analytical Geometry, and (*f*) Elementary calculus. Its detailed syllabus is given below : —

(a) *ALGEBRA* In addition to the course prescribed for 'optional course' the following topics are included: Indices, Simple Surds; Quadratic expressions and equations; simultaneous equations involving quadratics, remainder theorem; Progressions (arithmetic and geometric progressions only); Logarithms with applications, Binomial theorem for a positive integral Index.

(b) *GEOMETRY* In addition to the course prescribed in Geometry for 'optional course', the following topics should be studied :—

SCHEDULE "A (CONSTRUCTIONS)

Division of straight lines into parts in any given proportions.

Construction of a fourth proportional to three given straight lines and of a mean proportional to two given straight lines.

Construction of a triangle or square equal in area to a given polygon.

Construction of common tangents to two circles. Simple cases of construction of circles from sufficient data.

Construction of a regular pentagon.

Description, in a given triangle, of a triangle similar and similarly placed to another given triangle.

SCHEDULE "B" PROPORTION ; SIMILAR TRIANGLES

(1) *Proportion* If two triangles have one angle of the one equal to one angle of the other, their areas are proportional to the areas of the rectangles contained by the sides about the equal angles.

(2) *Concurrency and Collinearity* Ceva's theorem, and its converse ; Mendan's theorems and its converse ; Simson's or pedal line and its converse ; Nine points Circle.

(3) *Harmonic Ranges* The internal and external bisectors of an angle of a triangle divide the opposite side internally and externally respectively in the ratio of the sides containing the angle, and its converse ; Circle of Apollonius ;

(4) *Similarity* The rectangle contained by the diagonals of a Quadrilateral inscribed in a circle is equal to the sum of the rectangles contained by the two pairs of opposite sides (Ptolemy's theorem). The ratio of the areas of two similar polygons is equal to the ratio of the squares on corresponding sides. If two similar triangles are similarly situated, the lines joining their corresponding vertices meet in a point.

(5) *Radical Axis* : Determination of the locus of points from which tangents drawn to two given circles are equal.

The radical axis of three circles taken in pairs are concurrent.

Construction of the radical axis of two given circles. Easy deductions based on construction from Schedule "A" and theorems from Schedule "B"

(c) *Trigonometry* In addition to the 'optional course' the following topics should be studied Circular Measure ; Orthogonal projection as far as is required for defining trigonometric functions of any angle ; Trigonometric functions of angles Q $90^\circ \pm$ Q $180^\circ \pm$ Q ; Simple trigonometric equations ; Inverse trigonometric functions ; Trigonome-

trical ratios of sum, and difference of angles ; Graphs of Sin Q, Cos Q and Tan Q ; and Solution of triangles with simple two-dimensional problems in heights and distances.

(*d*) *Elementary Co-ordinate Geometry* (1) *The Point* : To find the distance of a point from the origin ; distance between two points ; co-ordinates of the mid-point of the line joining two given points ; to find co-ordinates of a point dividing the line joining two given points, in a given ratio ; Co-ordinates of the centroid (from the vertices of the triangle given) ; to find the area of a triangle with given vertices ; and to find the area of a quadrilateral with given vertices.

(2) *The Straight Line* To find the equation of a straight line (1) lying along the axis of Y ; (2) parallel to the axis of *Y or X* ; (3) through the origin making a given angle with the axis of *X* ; (4) making a given intercept on the axis of Y and having a given slope ; (5) making given intercepts on the axes of co-ordinates ; (6) passing through a given point and having a given slope ; (7) through a given point, drawn in a given direction ; (8) passing through two given points ; and (9) in terms of the perpendicular upon it from the origin and the inclination of the perpendicular with the axis of *X*.

To find the intercepts on the axes of the line AX + BY + C = O.

To find the slope of the line AX + BY + C = O and its intercept on the axis of Y.

To find the length of the perpendicular from the origin, and its inclination with the axis of *X* on the st. line AX + BY + C = O.

To find the point of intersection of two given lines.

To find the condition that three points lie upon a st. line.

To find the condition that three given lines may be concurrent.

Two or more St. Lines (1) To find the angle between the st. lines ; (2) to find the equation of a st. line through a point perpendicular to another ; (3) to find the relative positions of two points with respect to a given line ; (4) to find the length of the perpendicular from the given point to the line AX + BY + C = O ; and (5) to find the equations of the bisectors of the angles between two st. lines.

(e) *Mechanics* : *Statics* : (1) Composition and resolution of forces ; parallel forces ; Moments ; Couples ; equilibrium of a rigid body acted on by three forces in a plane.

(2) *Centre of gravity* : General formulae for the determination of the centre of a gravity and its properties stable and unstable equilibrium.

(3) *Machines* : (*a*) The lever ; (*b*) Pulleys ; (*c*) The inclined plane ; (*d*) The wheel and axle ; (*e*) The common balance ; and (*f*) The steelyards.

(4) *Friction.*

(5) *Work* Principle of work ; The screw.

Dynamics : Velocity and acceleration ; rectilinear motion. Motion in vertical lines under gravity (simple harmonic motion is not included).

The laws of motion The relation $P = mf$. The laws of motion applied to simple problems such as particles connected by strings ; motion on inclined planes, etc.

Impulse, work and energy (elementary knowledge) composition of velocities and accelerations.

(*f*) *Calculus* Differentiation of the functions x^n and their sums and differences for all values of n. Applications to gradients of graphs, rates of increase, linear kinematics (including the distance-time and speed-time graphs), turning values.

Integration—The area under a graph (the integration of x^{-1} is not included)

Applications to plane areas, Volumes of revolution, linear Kinematics.

(The theoretical treatment of limits and the use of the formula $df/dt = df/dx \times dx/dt$, is not included)

I have already given the syllabuses for the three groups in detail. In order to have a general and a comparative view of the three syllabuses, regarding the branches of mathematics included in each group and the purpose for doing so the following table will help : —

7. *The Utility of the Differentiated Curricula may be Stated as follows* : —

(1) The differentiated courses provide for the individual differences that exist among students ;

(2) Each course includes the material that is suitable and found within the reach of students studying the course and thus avoid the discouragement that is caused by attempting the course beyond their reach ;

(3) The differentiated course of study will help us toward homogeneous grouping, a tendency which is growing in the educational systems of today ;

(4) This differentiation in courses will help the teachers to adopt certain uniform method of teaching in the class ;

TABLE NO. 19

Showing comparative study of the three syllabuses

Name of the group and branches included	Characteristics of students permitted to take the course	Standards of study and age	Purpose or value of the course	Method for preparing the course	Nature of the topics
1 *Compulsory Course* (*a*) Arithmetic (*b*) Plane Geometry (*c*) Algebra	To be studied by all the students (specially meant for students of I.Q's less than 90 and for students of I.Q above 90 but have a dislike for the subject	I to IV according to old class system, age 10 + to 14 + years or V to VIII according to new class system	Utilitarian	'Job analysis' or 'activity analysis'	*Arithmetic*: Topics which are found useful in different jobs *Geometry*: Practical geometry found useful in life *Algebra*: Topics required for studies of other school subjects e.g. physics etc.
2. *Optional Course* (*a*) Arithmetic (*b*) Plane Geometry (*c*) Elementry Trigonometry (*d*) Algebra	Students of I.Q's 91 to 115 and students of I.Q's above 115 but unwilling to take "special Course"	Stds. V, VI, VII according to old class system or age 14 + to 17 + years. IX, X, XI according to new class system	Mental discipline	Comparing the existing syllabuses of different provices and selecting topics commonly recommended for studies of mathematics	Harder examples on the topics of the Compulsory course, Theoretical geometry, Trigonometry and graphs and variation, etc. in algebra
3. *Special Course* (*a*) Algebra (*b*) Plane Geometry (*c*) Trigonometry (*d*) Coordinate Geometry (*e*) Mechanics (*f*) Elementry Calculus	I.Q's above 115 and interest in mathematics	V, VI, VII, according to old class system or age 14 + to 17 + years. IX, X, XI according to new class system.	Preparation for higher studies in mathematics	By studying the courses of additional mathematics of the foreign Universities suitable and within the reach of students of the age 18.	In addition to the topics of Optional course, some more topics are included in algebra, Geometry and trigonometry and the study of three new branches e.g. Mechanics, coordinate Geometry, Calculus is introduced

(5) The differentiated curricula will save both the time and energy of the students studying the course ;

(6) The differentiated courses will not give a ground for the examiners to complain against the students, for ' peacefully avoiding certain topics ' as they do at present in their reports on the work done by examinees ; and

(7) The differentiated curriculas can easily fit in the present school system and the examination system of the S.S.C. Examination Board.

Hence my plea for the differentiated curricula in secondary school mathematics, on the basis of intelligence level, the differentiation of which will enable us to serve the very ideal of curriculum, for it will be really a preparation for " adult life ".

Some Aspects of the Educational Thought of India

By

C. M. THACORE, PH.D.

Principal, Lucknow Christian College, Lucknow

[*This is a synopsis of Dr. Thackore's thesis for the Ph.D. degree of the Lucknow University. It examines four educational experiments in India, viz. Gurukula, Visva-Bharati, Jamia Millia, and Wardha Scheme from the point of view of four philosophies—Idealism, Materialism, Humanism and Supernaturalism.*—Madhuri R. Shah.]

1. *The Four Systems of Education as a Phase of the Cultural Renaissance of India* This enquiry has been prompted by the writer's interest in the educational thought of India which, though not expressed, must certainly be implied in the endeavour to revive the Indian tradition of education and to evolve a system suited to the Indian conditions of life and culture. Out of the several attempts made during this century at such a revival, four have been selected Gurukula, Viswa-Bharati, Jamia Millia, and the Wardha Scheme. Two of these are pre-eminent experiments at a definite renaissance and revival of Indian education; the third is an endeavour to rehabilitate Muslim culture and tradition in Indian environment through the instrumentality of a school; and the fourth is an attempt to evolve a national system of education for the country as a whole growing out of and related intimately to Indian life and culture, especially in their economic and social aspects. It must be admitted that there is nothing like *pure* Indian educational thought in these times, because the close connection of the West with India during the past 150 years or so has considerably influenced India's thought in all its spheres, perhaps more in education than in any other. However, even after foreign influences have been admitted, there still remains a core of Indian thought which not only continues to maintain an individuality of its own, but also determines why a particular ideal or conception is to be adopted from some other group or country. So that even when India evolves such a modern system as the Wardha Scheme, she expresses her genius in the choice of influences for her assimilation. The Jamia Millia system is included in the study on the consideration that Muslim culture may not now be regarded as non-Indian, and that it represents, in its own sphere, a movement toward a revival of the past. All the four systems that have been included in this study are the result of a great and comprehensive movement toward a revival of Indian culture. While, in doing this, they have adopted and adapted some of the western aims and methods, at heart they are native to the soil. In them one may read the mind of India as it reacts to the educational problem.

It would be misleading to say that any of the four systems considered here are indigenous systems. That designation has, strictly speak-

ing, been reserved for the *pathshalas, maktabs, tols* and *chatuspathis* which are still found in India, running on old lines and protecting themselves as much as possible from foreign influences. However, these four systems may be considered as indigenous in a broad sense because they express the genius of India in the field of education, in an attempt to make education our own.[1] The Indian genius definitely shows itself in these experiments in the method it employs in the acquisition of knowledge

> India has proved that it has its own mind, which has deeply thought and felt and tried to solve according to its light the problems of existence. The education of India is to enable this *mind* of India to find out truth, to make this truth its own wherever found and to give expression to it in such a manner as only it can do.[2]

It is the aim of this study to discover the "manner" in which "this mind of India" has attempted in our own times "to find out" and "give expression" to truth. In this "manner" one may be able to see the Indian genius at work in the sphere of education. It is the conviction of the writer that this "manner" which constitutes indigeneity in a broad but real and vital sense will be observed in all the four systems under study—perhaps more in the Gurukula and the Visva-Bharati systems which are experiments at a definite renaissance of the Indian tradition of education and culture than in the Jamia Millia and the Wardha Scheme which have imbibed more of western thought, and whose indigeneity, though real, is often shrouded in western garb. Before, however, a detailed philosophical study of the systems is made, it would be well to take a brief glance at each of them from the historical point of view.

2. *Historical Background* (*a*) *The Gurukula System*: The Gurukula represents a system of education, centring round the *Guru* or the teacher, which was prevalent in ancient India. In the light of recent attempts to rehabilitate the system in modern times and conditions, it may be described as an educational institution in which the students, after being initiated according to Vedic rites, live in continual contact with their teachers, observe the rules of *brahmacharya* (continence) up to the age of twenty-four, and are taught modern subjects along with the Vedas, their auxiliary studies and the Sanskrit lore. The well-known Arya-Samajist reformer, Swami Shraddhananda (then Mahatma Munshi Ram), being dissatisfied alike with the official system of education inaugurated by the British in India and the old *Pathshala* system, raised a voice of protest and emphasized the need for a revolution in educational methods. He set on foot a movement for developing a new system of education which should revive the ancient Gurukula system and combine with it what was best in the modern official system. The result was that the Arya Pratinidhi Sabha [3] of the Punjab passed a resolution

1. See Rabindranath Tagore: "Making Education our Own", *The New Education Fellowship Bulletin*, April 1937.
2. Rabindranath Tagore: *The Centre of Indian Culture*, p. 1.
3. The Representative Assembly of the Arya Samaj.

in November 1896 that a Gurukula should be established.[4] The following were to be its aims and objects : —

To revive the long forgotten system of *brahmacharya* and make it the basis of education.

To provide an opportunity for the natural development of the physical, mental and spiritual faculties of students by rearing them in a favourable environment away from the pernicious influences of city life.

To develop a strong character in the students and to foster in their minds a love for their indigenous culture, for plain living and high thinking, and for knowledge for the sake of knowledge.

To create between the teachers and the taught relations of love like those between a father and a son.

To assign to Vedic and Sanskrit Literature as well as to the mother-tongue (Hindi) a place worthy of their importance in the scheme of education.

To make possible the study of the ancient Indian branches of learning with that of the English language and modern sciences.

To purge the scheme of education of the defects of the prevalent examination-ridden system.

To give education free of any charge.[5]

To institute research into ancient Indian history and to teach history from a national point of view.[6]

For the site of the proposed Gurukula a landlord of Bijnor, U.P., donated his village called Kangri [7] situated opposite to Hardwar on the banks of the Ganges. On this site the Gurukula was founded on the 4th of March 1902 with thirty-four students, divided into four classes under four teachers. The Ganges flood of 1924 caused considerable damage to the Gurukula buildings, and so it was shifted in 1930 to its present site on the banks of the Ganges-Canal at a distance of about three miles from Hardwar, near the northern bank of the Ganges.

Up to 1921 the Gurukula was managed by a local Governor under the general supervision of the Executive Committee of the Arya Pratinidhi Sabha, Punjab. In that year it was converted into a University with a special Governing Body and the various Councils necessary for the proper conduct of a University. The institution is a religious body professing the Arya faith formulated by the Arya Samaj in accordance with the doctrines of Swami Dayananda Saraswati, the founder of the Samaj. As a matter of fact, " the Gurukula owes its inception to the vision of Rishi Dayananda, the modern Indian seer, to which Swami Shraddhananda, the Arya Samajist martyr, gave a concrete practical shape ".[8]

---

4. *A History of Gurukul-Kangri*, 1902-1937 (Hindi), p. 6.
5. The Gurukula now charges, not a tuition fee, but a maintenance fee from all students at a moderate rate. Some Gurukulas charge nothing, e.g. Gurukula at Jwalapur.
6. *The Prospectus of the Gurukula University*, 1944, p. 2.
7. Hence the Gurukula under study came to be called " the Gurukula Kangri ". The name is still retained though the Kangri site has been given up.
8. Chamupati: *The Gurukula University*, p. 7.

The following are the Departments of the Gurukula :—

(1) The *School,* called the *Brahmacharya-Asrama,* has ten classes divided into primary, middle and secondary sections. The age of admission is not less than six, and not more than eight years. Only those students are admitted in respect of whom the *Vedarambh Sanskar*[9] has been duly performed, and whose parents or guardians undertake neither to marry nor to betroth them till they are at least of twenty-five years of age. Sanskrit and Vedic studies form an essential part of the course. Great emphasis is laid on religious and moral training. Manual training is provided by such subjects as clay-modelling, mat-weaving and spinning. English and Science are introduced in the fifth class.

(2) The *Arts College,* founded in 1908, offers the following subjects : the Vedas, Indian Philosophy, Sanskrit Language and Literature, English, and Hindi as compulsory subjects, and Western Philosophy, Economics and Politics, Chemistry, and History as optional subjects of which one must be taken. The course extends over four years. The medium of instruction is Hindi.

(3) The *Divinity or Veda College* has the same scheme of studies as the Arts College with this difference that it provides for a detailed study of the Vedas together with the auxiliary subjects such as Philology, Comparative Theology, and Astronomy. The aim is to train preachers for the Arya Samaj.

(4) The *Medical or Ayurvedic College* was founded in 1922 for the revival of Ayurvedic science and its modification in the light of modern medical knowledge. The course extends over five years. In addition to ancient Ayurvedic subjects, the basic subjects of modern allopathy form a compulsory part of the course. There is provision for theoretical and practical training in Naturopathy also.

Affiliated to the Gurukula University, there are a number of Gurukulas scattered over the country. There is one for girls at Dehra Dun, started in 1923, which imparts education in ancient as well as modern subjects together with subjects specially meant for girls such as Child-nursing, Domestic Medicine, Home Hygiene, and Embroidery. Among the future projects are an Industrial College and an Agricultural College.

One of the Ten Principles of the Arya Samaj Creed lays down that every Arya should endeavour to diffuse knowledge and dispel ignorance. The Samaj, therefore, considers educational work as one of its primary duties. In the early years of its work it started a College in Lahore called the *Dayananda Anglo-Vedic College* with the following objects :—

> To encourage, improve, and enforce the study of Hindu Literature.
>
> To encourage and enforce the study of Classical Sanskrit and of the Vedas.
>
> To encourage and enforce the study of English literature and sciences, both theoretical and applied.[10]

---

9. A religious ceremony initiating a person into the studies of the Vedas.
10. Lajpat Rai : *The Arya Samaj,* p. 186.

But there were quite a few men in the Samaj who did not agree with the policy of the D.A.V. College. They felt that the system of education followed therein was not after their heart; that it did not come up to their ideal of Vedic education; that the managers cared more for University results than for sound national education; and that its affiliation with an official university prevented them from making radical changes in the curriculum of studies and materially interfered with their independence. The dominant idea in the minds of the dissentients was to give a good trial to the system of education propounded by Dayananda in his works, especially, *The Satyartha Prakash.* High proficiency in Vedic Sanskrit and character building on Vedic lines were the objects which, they felt, should primarily govern their educational policy. They, therefore, set about the task of founding an institution to embody their ideals, and succeeded in establishing the Gurukula at Kangri, Hardwar.

The Gurukula lays great stress on the formation of character, character of a particular type. "Our object was a school where strong religious character could be built up on the basis of pure Vedic instruction." [11] To this end moral and religious instruction is regular and compulsory and extends over the whole ten years of the school course and the four years of the college course. In the early years a large number of Sanskrit verses from the scriptures are memorized by the students. Then follows a course of selections from *Manu Smriti* for the purpose of moral instruction; some parts of Swami Dayanand's works also are used. The moral and religious character of students is powerfully stimulated and developed by the study of the Sanskrit sacred literature, to which a large portion of each of the sixteen years of the course is given. A strict regime of simple and abstemious life is enforced. The students undergo a routine of early rising, bath, physical exercise, prayer and *homa.*[12] They live on strict vegetarian diet and abstain from stimulants. All this tends to create and foster an atmosphere which is saturated with the principles and ideals of the Vedas and the Upanishads. "The keynote of Gurukula life is *brahmacharya*, the time-old panacea for all ills, physical, mental and moral." [13]

Its supreme aim being a revival of Vedic culture and learning, the Gurukula necessarily becomes a religious institution. In fact, it is an institution of the religious sect called the Arya Samaj. This sets limits to its use by the non-Aryas. The religious routine and studies being so essential a part of the education imparted, no non-Arya student can very well become a member of the Gurukula. There is no rule making an exemption for him from religious instruction possible as, for instance, is the case in the Jamia Millia. Only Aryas can be on the staff, for the requirement of belief admits of no easy exception:

> Only such learned believers in the *Vedic Dharma* as are *Sadacharis* and subscribe to the fifty-one articles of belief in the *Vedic Dharma*, as settled by Maharishi

---

11. Swami Shraddhananda quoted in Lajpat Rai, *The Arya Samaj*, p. 196.
12. A fire oblation.
13. Châmupati: *The Gurukula University*, p. 4.

Swami Dayananda Saraswati, shall be eligible for appointment as teachers in the Gurukula.

Provided that the Antrang Sabha shall have the power of abrogating the condition of belief in the *Vedic Dharma* and subscription to the said fifty-one articles of belief as regards teachers other than the Acharya, to the limit it thinks proper.[14]

This exception might apply in the case of the Hindus, but almost certainly not in the case of the non-Hindus. Perhaps the insistence on the teacher being an Arya or at least a Hindu has some justification in the fact that in the Gurukula the teacher more or less becomes the centre of things. So much depends upon him in the way of inspiration, example, and influence that a non-Hindu might be a positive disadvantage in the faithful carrying out of the aims of the Gurukula. Nevertheless, the fact remains that a university so exclusive as this would have a serious handicap in becoming, what it should, namely, universal in spirit. The exclusion tends to keep out healthy elements of other religions and cultures which should be definite assets in a seat of learning. In this point, the Gurukula offers an interesting contrast to the Visva-Bharati. But within its limitations, it must be admitted that the Gurukula is an outstanding experiment in education. As Sir James Meston observed during one of his visits :

The Gurukula is one of the most original and interesting experiments carried on in these provinces, in fact, in the whole of India. One of the most wonderful, interesting, and stimulating institutions ; we have a band of ascetics devoted to their duty, and working in the wilderness following the traditions of the ancient Rishis, combined with the most modern scientific methods, and working practically for nothing, and a set of students of strong physique, obedient, loyal, thoughtful, devoted, extraordinarily happy, and extraordinarily well-fed.[15]

Myron H. Phelps, an American educationist, who stayed at the Gurukula sufficiently long to be able to give an unbiased and informed opinion says

I cannot conceive of any institution which can make a stronger appeal to Hindu sentiment regardless of all sectarian feelings. It brings back and makes living the best period of Indian life. It reverences and realises the leftist ideals of Hindu thought. It promises, indeed gives a trustworthy assurance of restoring to the people of India their ancient virtues.

It is thus in the light its contribution to the renaissance of Hindu religion and culture that the value of the Gurukula must be finally determined.

(6) *The Visva-Bharati System* The Visva-Bharati was formally founded on the 22nd December 1921. It was, however, not a new institution ; it had grown gradually out of a very small school built on the foundation of the Santiniketan Asrama which came into being in somewhat poetic circumstances.

Santiniketan stands on the crest of an undulating moor-land situated at a distance of a hundred miles from Calcutta. It was originally a bare spot in the middle of an open country, and was notorious

14. The Prospectus of the Gurukula University, 1927, pp. 86-87.
15. Quoted in Lajpat Rai, *The Arya Samaj*, p. 209.

as a haunt of robbers. Devendranath Tagore, one of the outstanding spiritual personalities of his time, referred to by his own countrymen as the *Maharshi* or the great saint, came here on one of his journeys. He was so much attracted by the place that he pitched his tent under two trees, the only two to be seen there, and spent his time in meditation and prayer. In March 1863, he acquired a plot of land. Rich soil was brought over, trees and shrubs planted, and a garden and orchard laid out. A house was built and later a temple. When the place had thus become a place of beauty, the Maharshi dedicated it as an *ashrama* or a forest-home or hermitage of ancient India "to the public under a Trust Deed endowing it with an annuity of Rs. 6,000 for the use of everyone who wished to meditate on God free from all antagonism of creed or sect. The only things forbidden were speaking ill of any religious sect, obscene amusements and flesh foods ".[16] Thirty years later, when Rabindranath thought of founding a boarding school at Santiniketan, he immediately received the warm approval of his father. The Vidyalaya or School was started in December 1901. The inspiration of this idea came to him from the Upanishads and the classical themes of Kalidasa, the poet, with their backgrounds of the ancient forest homes of India. Naturally and almost inevitably Rabindranath's mind fastened on the forest-idea as the fundamental basis of his Vidyalaya at Santiniketan. About the school the Poet wrote :—

> To give spiritual culture to our boys was my principal object in starting my school in Santiniketan. Having this ideal of a school in my mind, which should be a home and a temple in one, I selected this spot, away from all distractions of town, and hallowed with the memory of a pious life, whose days were passed here in communion with God.[17]

The school thus had its origin in the reaction of a poet's mind to the mechanical and soulless system of education current in his time. Although the experiment was on a small scale with a boarding school of hardly more than 50 pupils, it was a pioneer movement in many ways. The system of holding open-air classes, teaching of languages by the direct method, training of the senses through indoor games and handicraft, development of civic responsibility by training in self-government make it an outstandingly progressive school.

But Rabindranath Tagore could not long remain satisfied within the original limits of the school. The successive tours that he made in foreign countries immediately after the first World War convinced him of the necessity of a wider educational venture. The need felt at this time for a spiritual understanding between nations and the deep veneration with which the poet's message of international co-operation was received wherever he went, forced upon him the idea that India was the fittest place for starting an international centre. Such a centre, he felt, could be established most fittingly at Santiniketan. Santiniketan had a mission for the world. It could no longer remain secluded in its

---

16. Mahalanobis, P. C.: *The Growth of the Visva-Bharati, 1901-21*, Visva-Bharati Bulletin.
17. *Santiniketan and the Educational Institutions*, Visva-Bharati Bulletin No. 12, p. 6.

own corner as a mere school but must function as a living force developing all aspects of human culture. It was these circumstances and thoughts that gave birth to the *Visva-Bharati*, the International University, which was registered as a corporate body with a Board of Trustees in 1922. Santiniketan soon became a hive of varied activities. An Art School and a Department of Higher Studies and Research grew out of almost nothing ; the doors were opened to women to collaborate with men in an orderly freedom of intellectual companionship, and last but not least, the practical idealism of Rabindranath found shape in the Institute of Rural Reconstruction under the leadership of Leonard K. Elmhirst. C. F. Andrews and W. W. Pearson had already joined hands with Rabindranath, and soon came a host of other scholars and eminent personalities from all over the world. From India itself Visva-Bharati has attracted devoted services of distinguished educators, artists and men of practical idealism.[18]

The activities of the Visva-Bharati may be grouped under four heads (1) the cultural and academic centre at Santiniketan ; (2) the Rural Reconstruction activities in the surrounding villages, having their headquarters at Sriniketan with its farm and dairy ; (3) Village Industries with their workshops in carpentry, weaving, leathercraft, pottery, etc. at Silpa-Bhavana ; and (4) Organisations in Calcutta including a publishing business, an emporium for the sale of Silpa-Bhavana products, an Economic Research Board and the Visva-Bharati Sammelani. A brief description of each of the main institutions will help to understand their aims and objects.

(1) *The School or Patha Bhavana* at Santiniketan imparts education, elementary and secondary, in an atmosphere of freedom and in close touch with nature and rural conditions. Every effort is made to present knowledge in a concrete and connected shape. Fullest possible scope is provided to the creative urges of the young mind. The students meet once a month in their literary socieites where they read out poems, stories, essays, etc. of their own composition, or stage plays or give demonstration of their musical or any other artistic talent. They also edit their own magazines. These activities are run by their own elected representatives. The school course includes Bengali, Sanskrit, Hindi, English, Mathematics, History, Geography, Everyday Science, Hygiene, Public Administration, Music (Vocal and Instrumental), Dancing, Drawing, Painting, Carpentry (for boys) and Drawing and Leather-Craft (for girls). The medium of instruction is Bengali.

(2) *The College or Siksha-Bhavana* provides University education to young men and women in an environment and against a background of creative cultural activities which properly relate academic education to a full, all-round, human development. Students are admitted either to the Visva-Bharati course or the Calcutta University course. The Visva-Bharati courses are varied and lay special stress on the unity of knowledge, art and culture. The following subjects are taught : In the

18. Visva-Bharati : *A Brief Account of the Institution*, Visva-Bharati Bulletin No. 30, pp. 1-2.

Intermediate Class—English, Rabindra Literature and the writings of Mahatma Gandhi, Economics, Politics, Indian Civilisation, Modern World, Elementary Bengali or Hindi, Logic, Mathematics, General History, Classical Languages (Sanskrit, Pali, Persian and Arabic). In the B.A. Class—English, Rabindra Literature, Bengali or Hindi, Classical Languages, History, Economics, Politics, and Philosophy and Psychology. From time to time, lectures on cultural and intellectual topics are arranged for the students. Apart from such a wide range of humanistic studies available to them, the students are encouraged to take an active part in the work of rural reconstruction conducted by the Visva-Bharati in the surrounding area. The medium of instruction in the College is English.

(3) *The Research Institute or Vidya Bhavana* provides opportunities for research to advanced students and scholars in Hindi Philosophy, Indian Mysticism, Islamic Culture, Zoroastrian studies, Bengali Literature and History, Hindi Literature, and in the following Languages: Sanskrit (Vedic and Classical), Pali, Chinese, Tibetan, Persian, Arabic, Bengali, Urdu, Hindi, French and German. This institution truly represents Oriental Culture in all its different aspects.

(4) *The Institute of Sino-Indian Studies or Cheena-Bhavana* was established in April 1937 in order to encourage Sino-Indian studies with the co-operation of Chinese and Indian scholars. It has a magnificent and unique connection of Chinese works representing the Chinese Classics, History, Philosophy and Literature. The object is to establish and promote a cultural exchange between China and India.

(5) *The School of Fine Arts or Kala-Bhavana* was started in 1922 and owes its inspiration to the renaissance of Indian art in Bengal. The subjects taught are Free-hand Drawing, Nature Study, Painting, Copying, Ornamental and Decorative Drawing, Mural Painting, Clay-modelling, etc. To create an aesthetic sense and to help to live in an artistic atmosphere all round the *Asrama*, works of fresco-paintings, relief works on walls, and statue making in open are occasionally undertaken.

(6) *The School of Music and Dancing or Sangit-Bhavana* provides comprehensive training in Indian music, both classical and modern, and in Oriental Dance. A systematic training in most of the indigenous dances is being given and opportunity for a synthetic experience on the stage for music, dance and dramatic art is provided.

(7) *The School of Hindi Studies or Hindi-Bhavana* was established in 1938 with a view to providing a common ground of fellowship for the constant interchange of the noblest aspirations and creations of the various provinces of India in the domains of art, literature and philosophy through the medium of Hindi.

(8) *The Institute of Rural Reconstruction* at Sriniketan carries on various activities in social welfare work and maintains farms and workshops for giving vocational education. A Rural Teachers' Training

School is conducted and Sriniketan has also taken great care in training up a corps of volunteers in the locality to carry on village improvement work.

(9) *The School of Cottage Industries and Handicrafts or Silpa-Bhavana* at Sriniketan began as a small experiment in 1922 to provide technical education in artistic crafts. It imparts training to apprentices in a wide range of cottage industries and handicrafts. To provide craft training to the students of the Academic Departments of Santiniketan and Sriniketan is also among the basic aims of the Silpa-Bhavana.

The Visva-Bharati by its constitution is non-political and non-communal. It attracts students from all the provinces of India and has, therefore, an all-India atmosphere. It has a few teachers and students from foreign countries as well. The basic idea is that, in an educational institution, the most important factor must be the inspiring atmosphere of creative activity. Men should be brought together and full scope given to them not only for intellectual exploration, but for vital creation as well. The teaching should be the overflow of this spring of culture, spontaneous and inevitable. Moreover, education should be in full touch with complete life, economic, intellectual, aesthetic, social and spiritual. In conformity with this idea there has been gradually built up a centre of intellectual and cultural life at Santiniketan, and a model centre of Indian rural economy at Sriniketan.

The Visva-Bharati is the embodiment of a poet's vision of a better and higher world brought into being through the agency of an understanding of the various cultures of the world and of a co-operative effort in the realm of creative activity. This ideal is at the basis of the formation of the Visva-Bharati Society and gives a common aim to the diverse Departments of the Visva-Bharati and promises to nourish its life in the future as it has done in the past for over forty years :

> Looking ahead into the future one finds in the Visva-Bharati the development of a craving for higher order of living and for an active contribution towards a better understanding between man and man, between the different interests and cultures that divide mankind today. The world is suffering as it has never suffered before, it is torn with racial bitterness, national greed, and rival political ideologies. It cannot be denied that in accentuating these separatist tendencies the educational institutions have played a considerable part. If, therefore, a sane and civilised society is to be salvaged out of this present chaos, it is necessary that at least some educational institutions should help in generating an atmosphere in which man may find scope for the expression of his better feelings, his higher self, and his normal love for his fellow-man. It is in the light of this ideal that the contribution of the Visva-Bharati will finally be assessed.[19]

(c) *The Jamia Millia Islamia* The Jamia Millia Islamia was founded at Aligarh in October 1920 " in the days of the Khilafat and Non-co-operation Movements, in days of unlimited dreams and fervent determinations, of enthusiastic nationalism ",[20] as an expression of the

19. Visva-Bharati : *A Brief Account of the Institution*, Visva-Bharati Bulletin No. 30, pp. 2-3.
20. W. C. Smith : *Modern Islam in India*, p. 128.

desire of the Indian Muslims to keep their education in their own hands, entirely free from alien influences. It is a religio-cultural institution concerned with the task of promoting a renaissance of Islamic culture, of revivifying the religious and moral ideals of Islam, and of directing the Muslims from narrow-minded communalistic attitudes into a progressive nationalism. The three main aspects of the educational endeavour of the Jamia are thus found in its religious, cultural and national objectives.

The origins of the Jamia may be attributed to a protest against the outlook of the Aligarh Muslim University, founded by Sir Sayyid Ahmad, which had come, by 1920, to change from " the liberal religious atmosphere " to an attitude which was " patently both illiberal and secular. Its staff became much like any other university staff, and its graduates went out into the bourgeois world not much concerned with religious questions ; tolerant, rationalist, and care-free ".[21] Moreover, " the immediate dependence of the institution on the British government had its effect, particularly on the staff. Aligarh was famous for its pro-British gentility ".[22] The national element, therefore, broke off from the government-supported and controlled university and under a group of tents, they set up the Jamia as a thoroughly nationalist and free institution. Smith points out that there were three trends that brought the Jamia into existence and that were represented by three great persons : —

Maulana Mahmudal Hasan, Principal of India's foremost Muslim theological seminary, represented the pure Islamic educational and religious elements ; Muhammad Ali, the politician, Khilafatist leader, prime mover of the scheme and first Principal of the Jami'ah, stood for the politically progressive Muslim liberal enthusiasm, the opposition to the British and to their acolyte the official Aligarh University, and the vision of a new, free, creative Islam ; while Gandhi, the Hindu, the Congressite, backing the new venture, typified Hindu-Muslim unity and ardent (and religious) Indian nationalism.[23]

The enthusiasm that brought the Jamia into being did not last, for the movements—the Khilafat, Non-co-operation and Hindu-Muslim unity movements—that generated the enthusiasm received serious setbacks. The founders of the Jamia had believed that a freer and fuller education, called ' national ' education for want of a clearer term, was necessary. They had also hoped that the demand for national education which advocated boycott of official schools, colleges and universities would result in those institutions becoming national. This, however, did not happen and there was bitterness and disillusionment. Some of the founders of the Jamia declared that it had outlived its usefulness and should close down. Others believed that it was only now beginning to be useful. Some of the staff quietly found other work ; many students joined other schools and colleges. But enough remained to carry on the work. In 1925, the Jamia moved to Delhi and here it began to develop its real character. " This," says Smith, " marked the end of the spirit

---

21. *Ibid.*, p. 44.
22. *Ibid.*, p. 45.
23. Smith, *op. cit.*, p. 129.

of pure opposition to Aligarh and Government. In its new site, where it is gradually building up an extensive and remarkably beautiful home for itself, it has embarked on a more positive programme." [24]

Three years after the Jamia moved to Delhi, its teachers formed themselves into a society called the "Jamia Millia Islamia, Delhi" with a membership pledge of twenty years' service on a salary not exceeding Rs. 150 per month. Its main object was stated to be :—

> To promote and provide for the religious and secular education of Indians and particularly of Muslims in conformity with sound principles of education and in consonance with the needs of national life, and to that end to establish, maintain and control suitable educational institutions.[25]

The Society recognised no outside authority and resolved to accept no aid to which conditions limiting its supreme authority were attached. Eleven years later the Society registered itself and adopted a constitution which still operates.

The educational and cultural projects of the Jamia are of various kinds, illustrating its constant growth, its willingness to try new methods, and its desire to meet the changing needs of the Muslim community and the country. The projects comprise :—

(1) *The College* which is residential and imparts higher education upto the B.A. grade in arts and social sciences, with special provision for the graduates of the Arabic Madressahs to obtain the benefits of modern knowledge.

(2) *The High School,* also residential, conducted on modern lines with opportunities for developing skill in arts and crafts, and with special emphasis on individual work.

(3) *The Primary School,* residential, conducted mostly on the Project Method, with a school garden, a school bank, a school co-operative, and a school fruit shop, managed entirely by the boys.

(4) *The Public Library* for reference and study, consisting of nearly 20,000 standard books in Arabic, Urdu and English.

(5) *The Jamia Education Centre No. 1,* the first of a projected number of community centres, which combines a Middle School, a Community Hall and a Public Reading Room.

(6) *The Institute of Adult Education* which conducts an experimental centre to make the results of its experience available to other workers in the field. It has published over 150 booklets on a rich variety of subjects for adults who have newly acquired the skill of reading.

(7) *The Teachers' Training Institute* for preparing teachers to give instruction according to the principles and methods of Basic Education.

(8) *The Urdu Academy* which, by its publications, has made a substantial contribution to serious literature in Urdu.

---

24. *Constitution of the Jamia Millia Islamia,* Delhi, p. 3.
25. *Ibid.,* p. 3.

(9) *The Institute of Learning*, a Research Department, for the study and propagation of the Islamic view of individual and social life in relation to modern times.

(10) *A Publishing House*, one of the most progressive publishing establishments in the Urdu world. It is well known for its richness in children's literature, for its academic monthly journal and its magazine for boys and girls.

(11) *The Jamia Chemical Industries* attached to the Science laboratories of the Jamia for manufacturing various chemical preparations of daily use. Among the future projects to be undertaken as funds become available are a Polytechnic, a Girls' School and Hostel and a Hospital.[26]

The Jamia educational system covers a period of fourteen years: six years for the Kindergarten and Primary stage, six years for the Secondary stage (the last two years of which correspond to the Intermediate classes of the official colleges) and two years for the University stage. The medium of instruction is Urdu in all subjects (except in English) which is a compulsory subject and is taught from the fourth primary grade onwards. In the Primary section, the system of instruction is based on the Project Method and the Wardha Scheme with their emphasis on manual work, consisting of projects and arts and crafts. The aim is to develop initiative, encourage spontaneity, promote group co-operation and integrate physical and mental development so that the children learn by doing and laugh as they learn. In the Secondary section, the curriculum is not very much different from the government-controlled schools. The most important difference in the syllabus is in the study of Islamics which is a compulsory and essential part of the course. The manual work is provided through crafts like carpentry, book-binding and minor chemical industries and through other activities that give the students a healthy respect for manual labour and develop their intellect in such a manner as to save them from the clerical intellectualism of the usual one-sided school. There is, on the other hand, a vast difference in method the appeal is to initiative instead of to fear and the aim is accomplishment rather than passing examinations. The Dalton Plan is gradually being introduced. The University section has a very few students, and so it is able to offer only one course comprising Islamics, Social Sciences and English. The fact that Jamia's degree does not qualify its recipient for government service is rather an advantage than a disadvantage, since it gives to the teachers and the pupils freedom from the current methods of a book-school. The course aims at a critical study of contemporary society and its problems, and an inspiration for social service and co-operative citizenship.

The Jamia is a progressive institution in respect of its over-growing number of useful Departments that meet the needs of life and in respect of the methods of education it employs. It is fostering a type of education that puts into practice the latest methods, ideals and discoveries of

---

26. See *Silver Jubilee, Jamia Millia Islamia*, Delhi, pp. 1-2.

the modern West and at the same time is thoroughly relevant to Indian conditions. " Its education has aimed at being, and has been, progressive, Indian and Muslim." [27] Its official name in English, as printed on all its publications, is " National Muslim University " raising an ambiguity about the meaning of the term 'national'. Does the term have reference to the Indian nation or to the Muslim community ? Smith answers the doubt by calling the institution the " Islamic Community University ".[28] This seems a literal and significant rendering of the Urdu name and implies that the term national refers to the Muslim community. The institution is, from one point of view, a school for the Muslims and makes it its primary objective to nourish them on the Muslim cultural goods. To this extent, which is a large one, it is a Community University. But it does not, on the other hand, debar members of other communities from joining it either as students or as teachers. As a matter of fact, there are a few Hindu students who are exempted from compulsory participation in Muslim religious exercises and are offered the study of Hinduism and Sanskrit in place of Islam and Arabic ; and the present Principal of the College is a Christian, who has been connected with the Jamia ever since its inception. Furthermore, in educating the Muslims to be good Muslims with a progressively national outlook, and in providing educational opportunities of the best kind to the students, even if most of them be Muslims, its service may be called national in the large sense. The term national may thus be allowed to have a double significance which is justified by the officially stated aims of the Jamia : —

> The highest aspiration of the Jamia is to evolve a pattern of life for the Indian Mussalmans which will have Islam as its focussing point and will be so designed as to harmonise our national culture with the universal culture of mankind. It builds on the principle that true religious instruction will stimulate patriotism and desire for unity among the Mussalmans and create the ambition to excel in the service and advancement of real national interests ; so that ultimately India may have her full share of service in the common life of mankind and in the realisation of progress, peace and justice. . . . It has endeavoured to revive and re-affirm the faith, the culture and the traditions of the Mussalmans, accepting also all that is true or useful in the knowledge and the culture of the others. It is a religious institution because it teaches young men, whether Hindus or Mussalmans or Christians, to hold fast to the truth and to let it mould their lives and inspire their actions. It is a national institution because it inculcates the spirit of service, of tolerance, of self-control, and of self-respect. It is a civic institution in that it identifies moral and civic duty and fosters the public spirit and zeal without which civic life becomes a prey to all manner of fraud.[29]

In making a just appraisal of the Jamia it needs to be remembered that it is an experiment carried on under conditions far from friendly. " The founders aspired to make the Jamia an example and an inspiration in educational renaissance." [30] It must be said that they have succeeded

---

27. Smith, *op. cit.*, p. 129.
28. *Ibid.*, p. 128.
29. Mohd. Mujeeb : *Jamia Millia Islamia*, pp. 2-4.
30. Zakir Husain : *Jamia Silver Jubilee*, p. 2.

remarkably. And though there may be room for adverse criticism,[31] the fact remains that it is a worthy attempt, worthily carried on, to bring about a renaissance of Muslim religious and cultural heritage in an environment of modern life. On purely educational grounds, even Smith, admits that " the Jamiah's educational system remains one of the most progressive and one of the best in India ".[32] Nevertheless, the main contribution of the Jamia must be regarded to be in the field of the revival of the Muslim religious, cultural and educational ideals, modified in the light of modern times and practices.

(d) *The Wardha Scheme* : The conception of the scheme of Basic National Education, popularly known as the Wardha Scheme, originated with Mahatma Gandhi who first propounded its fundamental ideas in the columns of the *Harijan* in 1937. While we are told that there is nothing new in the Wardha Scheme and that it is merely an adaptation of the idea of an *activity school* already known in the field of education, in a certain sense, it may be considered new and original with the Mahatma. He did not arrive at his educational ideas as a result of his study of the writings of the western educationists. The scheme drew itself up in his mind as he thought over " the appalling illiteracy in the country, the dire need for spreading education, the utter impossibility of making it universal with the present financial resources of the Government if present methods were pursued, and the utter futility and waste of energy and time involved in the method now pursued in educating our children ".[33] As far back as 1921, he had suggested a form of craft-centred and self-supporting education through spinning ; but the vast possibilities of spinning as a means in education were not fully realised then. By 1937, however, spinning had developed greatly and its usefulness as an instrument of education became patent. Gandhiji thus came to the conclusion that " if education was to be made available to rich and poor alike, it must somehow be made self-supporting and that no education which did not enable the child receiving it to use his hands, feet and eyes effectively and usefully could be good enough for practical purposes ".[34] He put his scheme in a nutshell as follows :

As a nation we are so backward in education that we cannot hope to fulfil our obligations to the nation in this respect in a given time during this generation, if the programme is to depend on money. I have, therefore, made bold, even at the risk of losing a reputation for constructive ability, to suggest that education should be self-supporting. By education I mean an all-round drawing out of the

---

31. Such criticism is from the socialist point of view of Smith. He characterises the defects and deficiencies of the Jamia thus : "Chiefly, it is not 'left' enough ; not close enough to socialism. Because of this, even its religion suffers ; even the admirable efforts being made to co-ordinate with life are no longer able to co-ordinate it completely with modern life. For the same reason also, the Jamiah is losing something of its social dynamic. . Even its nationalism is now little more than an absence of those prejudices and perversions without which any Indian is naturally a nationalist" (Smith, *op. cit.*, p. 131). When it is remembered that the Jamia is an educational and cultural institution and not a political organisation, this criticism from the strong socialist point of view cannot be entirely justified.
32. *Ibid.*
33. Rajendra Prasad : *Two Years of Work*, p. 13.
34. *Loc. cit.*

best in child and man—body, mind and spirit. . . . I would, therefore, begin the child's education by teaching it a useful handicraft and enabling it to produce from the moment it begins its training. Thus every school can be made self-supporting, the condition being that the State takes over the manufacture of these schools.[35]

Gandhiji held that "the highest development of the mind and the soul is possible under such a system of education".[36] It may be noted that while he admits the various village crafts to be the means of education in this scheme, he would give the prior place to spinning, not only because its possibilities are most apparent, but also because it serves to supply one of the basic needs of man, namely, clothing, and has great economic significance for the masses of Indian population. The Scheme is really a scheme of village education. He himself has emphasized this important aspect of it:

A more correct, though much less attractive, description would be Rural National Education through village handicrafts. 'Rural' excludes the so-called higher or English education. 'National' at present connotes truth and non-violence. And 'through village handicrafts' means that the framers of the scheme expect the teachers to educate village children in their villages so as to draw out all their faculties through some selected village handicrafts, in an atmosphere free from super-imposed restrictions and interference. Thus considered, the scheme is a revolution in the education of village children. It is in no sense an importation from the West.[37]

In these terms were enunciated the basic principles of the scheme by the originator. The scheme took definite shape at a Conference held at Wardha in October 1937 which was presided over by Gandhiji himself. This Conference appointed a committee, with Dr. Zakir Husain as Chairman, to prepare a detailed syllabus on the basis of its deliberations and to submit its report to Gandhiji. The Committee submitted its first report in December 1937 and a second report in April 1938. The first report contains an elaborate exposition of the scheme explaining its fundamental principles, the aims and objects of the new type of school envisaged by it, the course for teacher-training and the system of supervision and administration. It gives a detailed syllabus for the seven years' course with spinning and weaving as the basic craft. The second report, besides answering the criticisms of the scheme, gives syllabuses for three basic crafts—agriculture, spinning and weaving, and woodwork and metalwork. It gives a clear exposition of the methods of correlating mathematics, social studies, general science, drawing and mother-tongue with the basic craft of spinning and weaving. In an appendix, it gives an interesting chart showing how the child's activities can be co-ordinated under this child-centred system of education.

The Indian National Congress at its Haripura session in March 1938 accepted the scheme and resolved that the education in the primary and secondary stage be imparted in accordance with it. It also resolved that "an All-India Education Board to deal with this basic part of education

35. *Educational Reconstruction*, p. 2.
36. *Loc. cit.*
37. Foreword to *Basic National Education*, 1939 ed.

be established in order to work out in a consolidated manner a programme of Basic National Education and to recommend it for acceptance to those who are in control of State and private education ".[38] A month later the Board was formed under the name of the Hindustani Talimi Sangh. With a view to pooling the experiences gained and elaborating and elucidating the scheme further, two Conferences were held of those concerned with the carrying out of the scheme in the Congress Provinces and others interested, one at Poona in October 1939 and the other at Jamianagar, Delhi, in April 1941. The reports of these Conferences which are most interesting documents containing the statement and elaboration of the scheme, were published under the titles of *One Step Forward* and *Two Years of Work* respectively. The Congress Ministries undertook the task of implementing the scheme with considerable zeal, making adaptations, here and there, but their resignations on the breaking out of the second World War gave a serious setback to the progress of the scheme. The work has, however, been resumed since 1946 when the Congress returned back to power.

The significant features of the Scheme may be briefly stated as follows : —

(1) The central principle is that intellectual training and manual training, far from being two separate aspects of education, are closely related, for the development of the intellect comes as a result of manual work. Intellectual training must, therefore, be co-related to manual training. This manual work, however, should be of a productive kind. " The manual training," says Gandhiji, " will not consist in producing articles for a school museum, or toys which have no value. It should produce marketable articles. The children will not do this as children used to do under the whip in the early days of the factories. They will do it because it entertains them and stimulates their intellect." [39]

(2) The above principle suggests the idea of a self-supporting education, for work implies production and production suggests monetary return. The term " self-supporting education " lends itself to, two meanings one, an education that will help its recipient to be self-supporting in later life ; the other, an education which in itself is self-supporting inasmuch as it produces articles which are saleable, and from the proceeds of the sale at least part of the expenses of the school can be met. The first meaning is not the meaning of the term as Gandhiji used it, and yet it is one of the objects of the scheme. " That," says Gandhiji, " will be the test of its value. The child at the age of 14, that is, after finishing a seven years' course, should be discharged as an earning unit." [40] The second meaning, however, is the meaning here intended. Gandhiji meant that not the entire cost but the expense on the teacher should be paid for by the proceeds from the sale of the articles made. The rest of the cost, such as that on building, etc. was to be met by the

---

38. *Hindustani Talimi Sangh,* Third Annual Report, 1940-41, p. 1.
39. *Ibid.*, p. 28.
40. *Ibid.*, p. 28.

State. "It is," he said, "by making the children return to the State a part of what they receive from it that I propose to make education self-supporting."[41] The self-support idea was rather severely criticised by a number of people on the ground that, if stressed beyond proper limits, it might result in "undue extraction of labour from the students" and "the real aim of education will recede into the background".[42] It was opposed also because it emphasized a kind of economy that could not be universally adopted in India for "if you lay too much emphasis on handwork and keep the machines at a distance, this will be detrimental to the economic well-being of the country".[43] Of course, Gandhiji believes in keeping the machines at a distance. But the main reason for him to emphasize the self-support idea is because he saw no other way to carry education to the crores of Indian children.

(3) The scheme provides for free and compulsory education for seven years, upto the age of fourteen. It combines both primary and secondary education and makes it free and compulsory. Some regard seven years too short a period for the kind of education intended; but the period is not an integral part of the scheme and, in Gandhiji's own view, can be prolonged for another two years.

(4) The medium of instruction is to be the mother-tongue, which is also to be the first language instead of English. Hindustani as the *lingua franca* of India will be the compulsory language. English is completely banned. On this last point, a difference of opinion does exist. It has been suggested that "as English is a language of culture and of international communication, some little corner may be assigned to English so that children may have a working knowledge of this language, too".[44]

(5) The scheme works out the idea of relating education to life-situations. The syllabus has been based on three centres which are inter-related, namely, the physical environment, the social environment and craftwork, making these the three foci of the curriculum. In preparing the syllabus the committee has "attempted to organise the subject-matter into significant and comprehensive units of experience which will, when mastered, enable the child to understand its environment better and to react to it more intelligently because they throw helpful light on the problems and conditions of life around him".[45]

(6) In modern India, citizenship is destined to become increasingly democratic. Also in modern times, the intelligent citizen must be an active member of society. The scheme, therefore, is designed to promote the ideal of citizenship by making the school a community of workers on a co-operative basis. It "envisages the idea of a co-operative com-

---

41. *Ibid.*, p. 19.
42. K. T. Shah quoted in *Educational Reconstruction*, pp. 139-40.
43. K. T. Shah quoted, *loc cit.*
44. C. J. Varkey: *The Wardha Scheme of Education*, p. 107.
45. *Basic National Education*, p. 50.

munity, in which the motive of social service will dominate all the activities of children during the plastic years of childhood and youth ".[46]

(7) The most fundamental feature of the scheme, however, is that it is inspired by the cult of non-violence. " The idea of self-supporting education," said Mahadev Desai at the Wardha Conference, " cannot be divorced from the ideological background of non-violence ; . . the new scheme is intended to bring into being a new age from which class and communal hatred is eliminated, and exploitation is eschewed." [47]

The Wardha Scheme only claims to be a scheme of village education for India and as such it is most practically and realistically conceived. The economic considerations seem, however, to be predominant both in method and ideology. One may discern in this a strong element of Russian influence, as the idealistic trend is considerably toned down and the supernaturalistic attitude completely kept out. Of course, it may be argued that the provision of adequate bread to the starving millions of India is in itself an act of great spiritual significance. To that view one is compelled to agree, but not to the total absence of religious instruction from the scheme. Gandhiji answers the question by saying that he did not lay stress on religious instruction because he was teaching the people " practical religion, the religion of self-help ".[48] But the answer does not satisfy. When all arguments on his side have been considered including the difficulty of administering religious instruction in a country like India, the fundamental objection to the omission of religion from the scheme still remains unanswered.

3. *The Four Educational Thinkers* The four systems under study have been inspired, either in their initial or in their later stages, by four outstanding educational thinkers. Their ideas and personalities have contributed not only to the origin and development of each respective scheme, but also to its philosophical basis. In other words, they are the four philosophers of the four schemes. The Gurukula, though an ancient system, was reintroduced to the people by Swami Dayananda who, in his *Satyartha Prakash*, gave an exposition of the underlying principles in the light of as much of modern thought as he could command. Though Mahatma Munshi Ram (later Swami Shraddhananda) was the actual founder of the Gurukula, the inspiration and the fundamental principles came from Swami Dayananda. The Visva-Bharati owes itself immensely to the genius of its Founder-President, Rabindranath Tagore. Both in educational thought and practice he gave to the institution an atmosphere and an ideal that are truly representative of his mind and personality. In fact, there could have been no Visva-Bharati without him. Though not one of the founders, Dr. Zakir Husain, has been its philosopher since 1926 and has contributed unstintedly of his personality to the character that it has come to have. Influenced a great deal by his study of the German educators, he has made use of

46. *Ibid.*, p. 13.
47. Varkey, *op. cit.*, p. 50.
48. *Educational Reconstruction*, p. 131.

their doctrine of types in the creation of a cultural institution for the Mussalmans of India. The Wardha System was originated by Mahatma Gandhi, and though not new in its psychology, it is new in method and approach which are characteristic of the politician-educationalist. The central doctrines of non-violence and self-supporting education, and the great emphasis on spinning and weaving in the scheme of education are nothing if not Gandhian in the truest sense. Since these four men have contributed so much to the philosophical bases of the four systems we are considering, we shall be justified in looking upon them as our four great educational philosophers, and draw upon their philosophy of life and education in the course of this inquiry.

4. *Four systems of Philosophy* : It is the opinion of the present writer that the educational philosophies underlying the four systems can be expressed in terms familiar to us in the western nomenclature. There are various schemes of classification of educational philosophies, but the one adopted in this study is that suggested by W. F. Cunningham in his *Pivotal Problems of Education*, viz. Idealism, Materialism, Humanism and Supernaturalism. It has commended itself to the writer since as a classification it is comprehensive and includes trends which are not commonly touched upon by writers on educational philosophy, at any rate, with sufficient emphasis. The classification gives four well-defined philosophies of education. Besides a consideration of these, we shall also consider two of the most important educational problems, namely, the questions of Social and Individual aims in education, and of Freedom and discipline.

We shall proceed on the axiomatic assumption that every system of education evidences a good measure of eclecticism of philosophical views ; so that while in any given system one philosophy may be predominant, others may be present, if not in their philosophical aspect, at least by reason of their methods. Our four systems will, therefore, be studied from the points of view of all the four schools of educational thought, indicated by Cunningham.

5. *Idealism* : (a) *Of the Gurukula System* : In so far as the Gurukula is a revival of the Vedic tradition of education it must and does hold the view current in Vedic and Upanishadic times that the ultimate reality is spiritual. The two outstanding features of the Vedic religion and times were sacrifice and *tàpas* and these are preserved in the Gurukula tradition in a life whose basic principle is austerity and whose routine is dominated by acts of worship.

It is not necessary for our purpose to go into a detailed discussion of the Upanishadic idealism. Suffice it to say that as Dayananda considered the " Upanishads amongst authoritative books " and regarded them as containing " realised knowledge " over against the Vedas which contain the " revealed knowledge ",[49] the idealism expounded in the Upanishads forms a doctrine of the Arya Samaj, and so of the Gurukula.

49. Satya Prakash : *A Critical Study of the Philosophy of Dayananda*, p. 116.

As a matter of fact Satya Prakash finds "in all these eleven Upanishads[50] the ancient Vedic heritage preserved in the most beautiful language".[51] With this historical and philosophical background, the Gurukula cannot but place emphasis on an idealistic programme of education, considering spiritual values of the greatest importance. As a safeguard against a possible misunderstanding it may be pointed out that this idealism does not "actually deny the reality of the visible world"; but it urges "that the ultimate reality underlying it is Brahman or the mystical self within us"[52]—a belief which, in the Gurukula, tries to supplement idealism with wholesome realism.

(ii) *Self-realisation through Contact with Nature* Self-realisation is the supreme goal of all idealistic education. In so far as the Gurukula is idealistic, it does attempt to achieve that goal. It is held that the mystical self which is in every human being is a particle of the same eternal spirit that creates, preserves, and destroys the phenomenal universe. Therefore, the aim of education should be "to awaken in the individual the consciousness of being one with that Universal Spirit, the unborn primary cause of the creation and to mould the course of life so as to be consistent with this higher and nobler conception of his existence".[53]

One of the principal ways in which this aim is sought to be achieved is to place the child in a close and continual contact with nature which has a mysterious way of awakening in an individual the divine spark in him: "The Gurukulas of old were chosen sites where nature should co-operate with the teachers in bringing out the pupil's inner mettle. Nature was rather regarded to be the chief mistress".[54] Through the forces of nature the pupil is to be led to their and his Creator. These represent to him embodiments of the mysterious Being with whom he is to attain a sense of unity.

Life in the open air and in direct contact with nature has a marked importance for the adolescents. In their later teens they love to think of Infinity both in space and time, an indication as it were of the fact that their inner spiritual essence is on the look-out for the source of life. So in ancient times, advantage was taken of this quality in the adolescent and he was given every opportunity to experience a union with nature leading him on to the Infinite in and outside him: "Nature and man were comrades in the forest colleges. Pauseless pursuit in these colleges was not that of the by-ways of blessedness in a lotus-land of rest, but of the royal road and rapture of ceaseless service, as well as of the infinite bliss and irresistible force locked up in self-restraint".[55] Life lived in the midst of nature thus served a twofold purpose: it helped the individual to realise his oneness with the Universal Spirit; and set

50. That is, the principal Upanishads.
51. Satya Prakash, *op. cit.*, p. 116.
52. S. N. Dasgupta: *op. cit.*, p. 50.
53. M. S. Aney: *Convocation Address*, Gurukula University, 1940, p. 6.
54. Chamupati: *The Aryan Ideal of Education*, p. 4.
55. V. S. Venkateswara: *Indian Culture through the Ages*, pp. 306-07.

free the forces locked up in him toward a self-realisation. In its attempt to follow the ancient forest colleges the Gurukula tries to place within the reach of all what chance may accidentally place within the reach of a few and turns the influences of nature to various accounts.

(iii) *Seclusion as an Aid to Self-realisation* : This positive influence of nature on the development of an individual is supplemented negatively by the absence or deliberate exclusion of influences that interfere with self-realisation. The Gurukula is situated beyond the noise and bustle of towns and "the object of this continued seclusion is to save the students from the contaminating influence of cities in the most impressionable years of their lives".[56] It may be argued that this kind of seclusion harms rather than helps the individual's natural growth and self-realisation, as it does not represent the environment in which he is going to live, after all. But it is neither essential nor desirable from the practical point of view that the school environment should correspond, in every detail, with the outer world. At any rate, so far as the evil influences are concerned, it is always thought best to keep them out, so that self-realisation may not be interfered with. The realist may argue that trials and temptations form a part of the sum of human environment and are, in fact, necessary, to bring out and develop the worth of a man's personality. That may be so; but in the early formative years of the child, more harm than good will be done by throwing him into the vertex of evil even before he has learnt to wade in still waters. On the other hand, the growth toward self-realisation would be accelerated by a favourable and select environment from which a large measure of evil influence has been banished.

(iv) *The Teacher as a Factor in Self-realisation* : Another important factor in the self-realisation of the individual is his contact with the teacher who, in the Gurukula system, is his friend, philosopher and guide. The importance of the teacher in the education of the pupil has been greatly stressed in this system. "The child, as soon as he steps into the threshold of the temple of learning, must surrender himself body, mind and soul to the care of the teacher."[57]

> The Veda has a very beautiful simile to illustrate the Guru's function in relation to his pupils. The Guru is said to be taking the child, when initiating him, into his womb. On him from this time forward devolve the same duties that the mother was required to perform during pregnancy. The safeguarding of the child from all pernicious influences of the outside world is to be his first care. And where could the child be more safe during his tender years than 'in the womb'?[58]

This kind of pupil-teacher relationship serves two purposes: one is to protect the child from all evil influences that may be around him; and the other, which is much more important, is for the child to have a companion in his search for truth.

---

56. Chamupati: *The Gurukula University*, p. 1.
57. Satyavrata: *Fundamental Principles of the Gurukula System of Education*, p. 2.
58. Chamupati: *The Aryan Ideal of Education*, pp. 1-2.

If the charge is made against the Gurukula system that in it the process of self-realisation on the part of the pupil is hampered by the influence of the dominating personality of the teacher, let it be remembered that while the pupil does pay homage to the learning, experience and personality of the teacher, he is not supposed to suppress his own individual freedom of growth. This was not the case in Vedic times ; and even the post-Vedic period bears evidence to the freedom which was permitted to the pupil in liberty of thought and action.[59] It would be wrong to say that the Gurukula teacher is a passive follower of nature. He is a practical educator and, with a particular ideal of character in mind, he tries to find the best means of attaining that ideal. In this process it is not the mind of the pupil alone that adapts itself, but also the mind of the teacher. As a matter of fact, from one point of view the interactions between the pupil and the teacher result in the self-realisation of both.

(v) *Religious Routine as a Factor in Self-realisation* : A third factor helping self-realisation is the religious routine of the school, especially the *sandhya* prayers[60] twice a day. "The habit of falling back twice a day upon one's self does one incalculable good. It affords an opportunity of introspection, of study of self."[61] This aspect of the process of self-realisation is especially emphasized in India.

(vi) *The Four Forms of Spiritual Activity* : The most important assumption of idealism that man is a spirit attributes to man spiritual activity which, in other words, is creative activity issuing "in the form of intellectual culture, art, morality and religion".[62] These four make up for the individual his psycho-social environment in which his creative activity has play. They are also aspects of reality and life and of the greatest importance to the idealist. The Gurukula system is predominantly supernaturalistic ; but supernaturalism does include idealism, and so these four factors are also a part of its programme. As to *culture,* it aims at a definite type of intellectual culture nourished by the ideas and thoughts coming down through its heritage from the past. Though the beneficial and assimilable elements of western culture are to be adopted in the make-up of this culture, it is to retain "the perennial features of the virile and vitalising civilisation of the ancient Aryans by moulding and shaping its institutions to suit the altered environments of the times".[63] One may call it the neo-Vedic culture. The intellectual outlook and the atmosphere of the Gurukula is saturated with this cultural tradition. In the realm of *art* it must be confessed that while art is not positively discouraged, no encouragement is given to its development, perhaps because of the fear, which is ungrounded, that art leads a man away from a strict religious life by tending the emotions to run along lines opposed to *brahmachari* life. Between Santiniketan and the Gurukula there is a great contrast in point of an art atmosphere. When it is remembered that some of the greatest art in India and in the world has

---

59. V. S. Venkateswara : *Indian Culture through the Ages*, p. 136.
60. The twilight prayers, said early morning and evening.
61. Chamupati : *The Aryan Ideal of Education*, pp. 5-6.
62. R. R. Rusk : *The Philosophical Bases of Education*, p. 95.
63. Lajpat Rai : *The Arya Samaj*, p. 195.

been religious in origin and that religion has been a fruitful source of the aesthetic activity of mankind, it seems strange that the Gurukula does not place adequate emphasis on it. Perhaps the principle of austerity that governs the life of a student in the Gurukula tends to discourage innate propensities to cultivate the Beautiful. However, a great deal of emphasis is placed on *moral life*. " The ban on luxuries and the rigid enforcement of physical exercise and rules of *Brahmacharya* in pure surroundings free from all things suggestive of evil, must result in a healthy robust manhood."[64] The promotion of moral life is centred round the proper direction of the sexual instinct. The Gurukula student is called a *Brahmachari* which means, if the traditional interpretation is to be accepted, one who is sexually pure. The aim is to develop a moral and spiritual character on this basis : " An Acharya trains the pupil in an all-round development of character with special reference to his sexual life ".[65] The *religious aspect* of the Gurukula education is dealt with separately later on under " Supernaturalism " and need not be taken up here. It may be sufficient to state that religion is the most powerful factor in the entire life of the institution and the promotion of a religious character forms the supreme aim of the Gurukula.

(b) *Idealism of the Visva-Bharati System* Tagore's idealism is a poet's idealism, having for its hidden spring a divine discontent with things as they are. Born in Calcutta, Tagore had had the experience of the life and outlook of those who lead a narrow and cramped existence in the crowded dwellings of a modern city and who live in obedience to convention and by a faith in the power of gold. He had been at the confluence of three cultures—the Hindu, the Moslem and the British—the last of which was bidding fair for domination. The old traditional life of the country was passing away and " the modern city-bred spirit of progress had just begun driving its triumphal car over the luscious green life of our ancient village community ".[66] The whole process was characterised by a conflict between a life of peace and simplicity and a life of hurricane activity and luxury, between the doctrine of spirit and the doctrine of matter. To the mind of the poet the prospect was a sad one :

> Though the trampling process was almost complete around me, yet the wailing cry of the past was still lingering over the wreckage. I had often listened to my eldest brother describing with the poignancy of a hopeless regret a society hospitable, sweet with the old-world aroma of natural kindness, full of a simple faith and the ceremonial poetry of life. But all this was a vanishing shadow behind me in the golden haze of a twilight horizon,—the all-pervading fact around my boyhood being the modern city, newly built by a company of western traders and the spirit of the modern time seeking its unaccustomed path into our life, stumbling against countless anomalies. But it always is a surprise to me to think that though this closed-up harness of a city was my only experience of the world, yet my mind was constantly haunted by the home-sick fancies of an exile.[67]

---

64. *The Prospectus of the Gurukula University*, 1927, p. 43.
65. Satyavrata : *Fundamental Principles of the Gurukula System of Education*, p. 7.
66. Rabindranath Tagore : *A Poet's School*, Visva-Bharati Bulletin No. 9, p. 4.
67. Rabindranath Tagore : *Sadhana*, p. 69.

The home-sickness, the restlessness of the spirit, arises from the lack of harmony in the world and in the individual, showing the spirit of a man at cross purposes with the impertinence of material things. To Tagore, man is a finite-infinite being : he combines in himself nature and spirit. He is earth's child, but heaven-heir. At one pole of his being, man is one with stocks and stones, but at the other, he is separate from all.[68] Hence there comes into his spirit a yearning for the things that exceed his grasp :

> I am restless, I am athirst for far-away things
> My soul goes out in a longing to touch the skirt of the dim distance.
> O Great Beyond, O the keen call of thy flute !
> I forget, I ever forget, that I have no wings to fly, that
> I am bound in this spot evermore.[69]

Thus he finds himself " a stranger is a strange land " and " a wanderer in my heart ".[70]

Thus finding himself an exile in the world, Tagore set out to find his home. This was not far to seek. First of all, there was before him the tradition of the forest colonies of ancient India, the *asramas*, where the seekers after truth lived in and practised the presence of the eternal. Secondly, his own father had founded an *asrama* and called it Santiniketan or the Abode of Peace. Tagore was fascinated by this modern revival of an old tradition for there was much in it to attract the poet's imagination :

> In India we still cherish in our memory the tradition of the forest colonies of great teachers. These places were neither schools nor monasteries in the modern sense of the word. They consisted of homes where with their families lived men whose object was to see the world in God and to realise their own life in him. Though they lived outside society, yet they were to society what the sun is to the planets, the centre from which it received its life and light. And here boys grew up in an intimate vision of eternal life before they were thought fit to enter the state of the householder.[71]

When Tagore started a school in the old tradition at his father's *asrama*, it was a home-coming for himself as well as for the children whom he gathered around him. There the souls of men would find the harmony that was lacking in the world outside.

(ii) *Self-realisation through Harmony with the Universe* : Thus in Tagore's philosophy the realisation of the self becomes the end and harmony with the universe, the means. In his school he proceeded to bring about this harmony by living a life in the forest, in the open air. " The young mind," he says, " should be saturated with the idea that it has been born in a human world which is in harmony with the world around it." [72] The ordinary school does not attempt to promote such a harmony ; on the contrary, it " forcibly snatches away children from a

---

68. Rabindranath Tagore : *The Gardener*, p. 5.
69. Rabindranath Tagore : *The Gardener*, p. 5.
70. *Loc. cit.*
71. Rabindranath Tagore : *Personality*, p. 128.
72. *Ibid.*, p. 114.

world full of the mystery of God's own handiwork, full of the suggestiveness of personality ".[73] So in his *asrama* school at Santiniketan, Tagore set out to put into practice the ideal of securing a harmony between man and nature and so realise one's self in God. According to his way of thinking nature has a soul which helps man to a union of his soul with God.

It is India's mission to realise the truth of the human soul in the Supreme Soul through its union with the soul of the world. This mission had taken its natural form in the forest schools in the ancient time.[74]

(iii) *Man and Nature* : To Tagore the relation between man and nature is " that of personal love and not that of mechanical law of causation ".[75] Nature is in the place of mother and supplies emotional, moral and spiritual nourishment to man. This great truth can be realised in its entirety and fullness only by a life in the open air where the human aspects of the world of nature are forcefully evident and influence one's mind and thought in a wholesome measure. Tagore's open-air school thus affords education in the great principle of love-relationship between man and nature.

(iv) *Emphasis on Spiritual Culture* Tagore deplores the emphasis placed in schools on the intellectual and the physical to the neglect of the spiritual. It is the consciousness of this defect that principally made Tagore to start his school : " To give spiritual culture, to our boys was my principal object in starting my school in Santiniketan ".[76] He compares the man whose mental and material power far outgrows his moral strength to " an exaggerated giraffe whose head has suddenly shot up miles away from the rest of him, making normal communication difficult to establish ".[77]

(v) *The Immanence of the Infinite in Nature* : The spiritual world in which Tagore believes is not a world apart from this world of ours, but is the innermost truth of this world. " With the breath we draw we must always feel this truth that we are living in God." [78] He sees spiritual significance in natural facts and the eternal spirit in all objects. So it is that, according to the poet, men are enjoined to be fully awake to the fact that they are in closest relation to the things around them and that they are to regard the morning sun, the flowing water and the fruitful earth as the manifestations of the same living truth which holds them all in its embrace.[79] This belief in the immanence of the Infinite in nature leads Tagore to advocate " life in nature and in the open air as the best means of spiritual progress, for in nature the religious eye will see the Infinite lying stretched in silent, smiling repose ".[80]

---

73. *Loc. cit.*
74. *Ibid.*, p. 138.
75. Rabindranath Tagore : *Personality*, p. 112.
76. Quoted in *Santiniketan and the Educational Institutions*, Vivsa-Bharati Bulletin No. 12, p. 6.
77. Rabindranath Tagore : *Nationalism*, pp. 35-36.
78. Rabindranath Tagore : *Personality*, p. 127.
79. Rabindranath Tagore : *Sadhana*, pp. 8-9.
80. S. Radhakrishnan : *The Philosophy of Rabindranath Tagore*, p. 21.

And here one may stop, for Tagore's idealism is now beginning to border on supernaturalism. He began with the yearning of a spirit for his home and ended by discovering that that home lay in harmony with nature. In that home he would realise himself and grow to the full stature of his spritual life. Santiniketan represents an attempt to create such a home—paradise—for children who would live, day in and day out, in communion with nature and with the eternal that pervades nature. There would their spirits find full expression and realisation in spiritual activities such as intellectual culture, art, morality and religion, and, against the materialistic outlook of the world, proclaim the supremacy of spirit and things of the spirit.

(c) *Idealism of the Jamia Millia Islamia*: "I believe education," says Zakir Husain, "to be essentially an enterprise to help the divine in man." [81] The Muslim belief in immortality implies in every individual the presence of some divine elements that are the essence of his life. Education, therefore, must consider it its supreme business to help the flowering forth of these divine elements that are present in the child from his birth. He says: "We have to remember that education is no addition from the outside, no beneficient imposition, no mere dressing up, no writing on a clean slate. It is the cultivation and development of what is already there in the educand." [82] This does not mean that the child can grow without the necessary aid of nourishment drawn from his physical and cultural environment. For his mental growth and development he needs to assimilate "the cultural goods of society, its art, its science, its technique, its institutions and customs, its religious practices and symbols ".[83] But he grows according to what Zakir Husain calls his own *mental relief*. This mental relief constitutes the individuality of the educand and is to be nurtured by the cultural goods that correspond to it. "All roads lead to the Rome of a cultured life, but each individual must approach it along the road designed for him and his like. Education is nothing but the individualised revivification of objective culture." [84] The process of education must, therefore, be adjusted to the mental relief or inborn constitution or spiritual make-up of the individual.

(ii) *The Creative Function of Man*: Another aspect of the idealistic thought of Zakir Husain is the importance he places on the creative function of man which assumes the presence in him of a spirit, an autonomous spirit, whose peculiar characteristic is creative activity. Man, he believes, is made to create. He cannot live or grow, nor can he have any happiness or peace unless he engages himself in some creative activity through which he adds to the common store of human values. "His fulfilment," says Zakir Husain, "as an individual and his contribution to society and its culture will depend on his realising himself and

81. Zakir Husain: *What I Believe*, a radio talk (unpublished).
82. *Presidential Address to the International Students' Service Conference*, Madras, 1947 (unpublished).
83. Zakir Husain: *What I Believe*, a radio talk.
84. Zakir Husain: *Presidential Address to the Twentieth U.P. Secondary Educational Conference*, 1941, pp. 6-7.

on society providing for him the opportunity to express himself through his work." [85] Self-realisation, the supreme end of idealism, is thus present in his thought.

(iii) *The Process of Self-realisation* : The process of self-realisation, according to Zakir Husain, is from individuality, through character, to personality. The individual, as he is born, possesses conflicting instincts on the animal level, has urges and impulses that strive for supremacy. The first task of education is to integrate these instincts and impulses into a coherent, consistent pattern and thus evolve the educand's individuality into character. The teacher must encourage activity that leads to self-expression and ultimately to self-discovery revealing the child's type of mind. This will help the teacher to put the child on the right road and help the child to integrate the diverse elements of his individuality into a harmonious unity. "You should realise," says Zakir Husain, "that your road starts from your natural individuality, goes through the laborious but exhilarating process of the harmonious integration of its diverse elements into a character, which when harnessed to the service of some great value attains its destiny of becoming a personality." [86]

What is this character that Zakir Husain has in mind ? It is the emergence and established result of the individual's inborn mental pattern or type. When this character has been determined the next step to personality should not be a difficult one.

(iv) *Types or Characters* : Now, as to the character or type, Zakir Husain gives us a clear elucidation in *I Became a Teacher*. A new psychology, he says, seeking to characterise the human types, not only by their psychological or physiological reactions, but by their culture systems, may come to the educator's help. It may recognise theoretical men and imaginative men, religious men and social men, economic men and dominating men. It may see that the theoretical man is led in his mental growth primarily by the urge for objective knowledge. He seeks to grasp reality as it is. The imaginative man, the artist, does not comprehend reality objectively, his inclination is to give expression to the subjective significance of things as he experiences them. The religious man is guided in his life by the relationship of all reality and all appearance to a higher spiritual whole, yearning for peace and salvation which comes from the part's reconciliation with the whole. In the social type, the dominant note is that of love for one's fellowmen. His urge is not to know, nor to express, not even to bring himself in relation to something transcending himself ; it is love for living and moving men; a sense of solidarity with them, of readiness to help them and the joy of sacrificing himself for them. The highest principle of the theoretical man is Truth, that of the imaginative man Beauty, that of the economic man Gain, that of the religious man Salvation, that of the power man Domination, that of the social man, Love.

---

85. Zakir Husain : *My Utopia*, radio talk (unpublished).

86. *Presidential Address to the International Students' Service Conference*, Madras, 1947 (unpublished).

(v) *What is personality ?* Education should help to produce the type, but it must provide for growth beyond the type—growth into personality. What is this personality ? In an article on Personality,[87] Zakir Husain points out that personality cannot be defined as a limited object. Every personality is unique, in spite of any common features that may be observed. It is not an ideal combination of virtues, or a geometrical beauty. It is born, but must also be made. It is gifted, but yet must learn. It is passionately conscious of itself but it is always looking beyond itself. It does not embody any moral or spiritual quality that we may not aspire to ; it has strength ; and it is responsive, and who is there among us who has not felt the call to right some wrong that hurts him, to paint a vision of beauty upon some blank space on the canvas of life ? Personality is adaptable, ready to meet the challenge of any situation, to plunge into the whirlpools of circumstance, to fling its rainbow of joyful colours across the murkiest sky. We have all, in our own way, to struggle for existence, for achievement ; and we must cultivate a dexterity of mind that can turn unfavourable situations to our advantage. We, as mere individuals, look upon the circumstances of our life as unalterable, implying thereby that we are apart from it. But personality absorbs its environment and transmutes it into a better one. There are, no doubt, conflicts. Personality must bear the buffetings of wind and wave far more than those who wisely avoid bad weather ; but as the swimmer senses the deeper currents, so does personality appreciate instinctively the true indications of circumstances and divine the course of events. It is endowed by nature with aptitudes appropriate to its particular field of endeavour, but we find on close scrutiny that this aptitude has been long and patiently developed, and may be latent in many who are too timid, too distrustful of themselves to explore their own nature. The crowning feature of personality is its faith in its own destiny, its affirmation of moral law. It achieves through success, it may even achieve more through defeat. Men have sometimes been deceived into thinking that it is altogether the product of its environment or they have carelessly imagined that personality can create an environment for itself. Personality is incapable of detaching itself from society, but it is not content to remain subservient to the circumstances of life. It seeks to control them as spontaneously and naturally as we move our hands and feet. In the language of mysticism and poetry, we would say that personality has all the potentialities of self and the character of selflessness. The personality that is selfless fears nothing. It repudiates the lower because it must attain the higher. It breaks the confines of individuality, the self-imposed limits of self, to reach its full stature. Its progress is not from social to isolated existence, but from bondage to freedom.

Lest individuality be mistaken for personality, Zakir Husain points out the difference between the two Most of our ills, he says, are due to the timidity which has induced us to base our rights and our hopes on an individuality insured against damage and not on a personality that

87. Published in *The Morning News*, Calcutta, c. 1944.

can make up all losses. Personality is essentially human. Its character is latent in us, its possibility continually reflected in all we are able to achieve. It is a projection of ourselves into a life of greater moral dimensions. Its development can be the objective of education ; but it is something we can hope to attain, in some measure, in spite of our education. Personality emerges only when the fetters of individuality have been broken, when the human spirit has been released from the restraints of selfishness and the obsession of pettiness and fear. It is not only superior strength and self-assertion that distinguish personality from individuality, but its direct and immediate perception and spontaneous fulfilment of the moral law. For individuality, moral commands are in the nature of an *ex parte* decision by a hasty judge, all faith is an imposition that cannot be too ruthlessly exposed. For personality, faith is in the nature of things and the observance of moral law indispensable to freedom.

(v) *The teacher's part in the Development of Personality* : Following these doctrines of Individuality, Character and Personality, the Jamia makes every endeavour to help the individual pupil to find his character and lead him on to the development of his personality. One of the four principles on which the school is run is : " Formal instruction must serve to develop initiative, not to thwart it ". In this there is respect for humanity and belief in spontaneity and freedom. But in the natural formation of the personality of the child, the teacher, too, has a part to play, not in curtailing the freedom, but in helping the growth :

> In the Utopia the first thing the teacher should insure is freedom of development and opportunity of growth. It is not law and vindictive government alone that suppress individuality. We are all in different ways and degrees, guilty of forcing our will on others. The teacher, in his Utopia, will not consider life a hypothetical extent of space and divide it equally among the living. He will eradicate weakness, chasten strength, and give to each the type of freedom he needs.[88]

And last of all, he will lead the pupil on to some values to which he will give his heart and soul and will develop around it his personality from which will emanate strength and power.

(vi) *The Social Aim* : The idealistic doctrine of Zakir Husain is tinged with a social aim that he is never tired of emphasizing, for it is with reference to society that an individual can attain his full measure of development of personality. " We will have to transform our schools," says he, " from places of theoretical intellectual one-sidedness into those of practical human many-sidedness ; from centres of mere acquisition of knowledge to those of its right use ; from places of passive receptivity into those of creative activity ; from places of individual self-seeking to places of devotion to social ends."

Since the Jamia is not yet fully developed, the machinery for the development of personality is not much in evidence. The different types of institutions that would develop the various types of individuals have

---

88. *Presidential Addresses to the International Students' Service Conference*, Madras, 1947 (unpublished).

not yet come into being, but that seems to be the line of the future development of the Jamia. It has yet to organise a diversified system at the secondary stage to allow for various aptitudes and inclinations. When this is accomplished Zakir Husain's doctrine of the development of personality will be more fully illustrated.

(d) *Idealism of the Wardha Scheme* : It may appear idle to look for any strain of idealism in a system such as the Wardha Scheme which has its roots deep in realistic economic considerations and is based on biological naturalism so far as its methods are concerned. The fundamental proposition of idealism is " that the mental or spiritual is more real or at least more important than the material " [89] and such a principle might be difficult to trace in a scheme inspired by political and economic objectives. On the other hand, it would be difficult to believe that the mind in which the scheme originated would have left the spiritual or idealistic out of consideration. As Acharya Kripalani says :

> I, therefore, maintain that the new method proposed by Gandhiji is scientific. But how can Gandhiji, the idealist and the mystic, be a scientist ! This is something foreign to the educated mind. Yet some of the greatest scientists have been ardent believers in God. A scientist need not necessarily be a materialist. The essence of science is the investigation of truth by the experimental method.[90]

Read the other way round, this argument would emphasize the idealistic nature of Gandhiji's thought.

(ii) *The Spiritual Man in a Spiritual Society* : To the mind of Gandhiji the individual has a divine origin and as such has also a divine destiny. His aim, therefore, must necessarily be spiritual and to aid him in the task of achieving perfection and his divine destiny, society must be organized on spiritual and moral principles. In Gandhiji's philosophy of life the emphasis on the social and the economic is a moral one. This is where his philosophy differs from the Marxian philosophy of socialism which divorces moral principles from its ends and means.

> The individual and the social, the inner and the external life, must, therefore, be informed and guided by principles of non-violence, truth and justice. That this may be so, it is necessary that in social, political and economic relations the means must be as pure as the ends. If it does not benefit a man to lose his soul to gain the whole world, it does not likewise benefit a nation to gain the whole world and lose its soul. Moral society must have its appropriate external, social, political and economic institutions.[91]

(iii) *Democracy* : According to Gandhiji, democracy is a moral principle and is meant to assert the divine dignity of man on the material plane. To mean anything real, it must be worked out in the organisations of human society :

> The social order that Gandhiji contemplates must therefore be free from economic, power or any other exploitation. If this is to be accomplished society's politics, its economics and social life must be built on non-violence, truth and justice. If any of these principles are absent, and to the extent to which they are

89. J. S. Ross : *Groundwork of Educational Theory*, p. 112.
90. J. B. Kripalani : *One Step Forward*, p. 24.
91. *Ibid.*, p. 36.

absent, there is bound to be exploitation. Whenever there is exploitation, man's divine dignity is offended and he becomes a mere means and not an end in himself. Gandhiji, therefore, is against all concentration of power, social position, or worldly goods in the hands of the few. What he contemplates is a classless society of workers.[92]

(iv) *Decentralisation* According to Gandhiji, the greatest evil that militates against man realising his divine destiny is exploitation. Although it is not confined only to the economic field, it has made itself felt most poignantly in man's economic life, especially in India. Gandhiji's advocacy of cottage and village industries together with decentralised agriculture and commerce is a solution of the problem ; and the whole aim of the Wardha Scheme is so to train the rural population as to make this possible. The villager is to come into his own, he is to ply his trade as he pleases. He is restored his initiative and freedom of action. He is enabled to earn his living without having to depend on means not within his reach or control. Unfettered by crippling conditions of an industrialised world, he can be the architect of his own fortune and realise his purposes in life. The principle of decentralisation is thus a moral principle.

(v) *Non-violence* At the back of the self-supporting aspect of the scheme is a moral principle. This is how Gandhiji puts the matter : —

> Europe is no example for us. It plans its programme in terms of violence because it believes in violence. I would be the last to minimise the achievement of Russia, but the whole structure is based on force and violence. If India has resolved to eschew violence, this system of education becomes an integral part of the discipline she has to go through. We are told that England spends millions on education, America also does so, but we forget that all that wealth is obtained through exploitation. They have reduced the art of exploitation to a science, and might well give their boys the costly education they do. We cannot, will not, think in terms of exploitation, and we have no alternative but this plan of education which is based on non-violence.[93]

Here we have the application of the principle of non-violence in the training of the child as a future citizen of the world. It is calculated to bring in a new era in which class hatred growing out of competition and exploitation is banished and a social order established in which all men and animals in the country are usefully employed in the earning of their livelihood. The Wardha Scheme is a practical educational programme directed towards the concrete aim of providing the moral man with a moral society. Its central feature is productive manual activity and it has been asserted that " the handwork programme would provide the finest kind of discipline for a national effort for non-violence ".[94] Manual work, such as the Wardha Scheme is built upon, directs the energy of man into channels of usefulness to society instead of into ways of exploiting others. Throughout most of his history man has found satisfaction in trying to master material things, the forces of his environment. When he has not had that opportunity, his creative dominating

---

92. J. B. Kripalani : *The Latest Fad*, p. 82.
93. *Inaugural Address at the Wardha Conference*, 1937.
94. R. B. Gregg : *A Discipline for Non-violence*, p. 30.

instincts have led him to try to dominate his fellowman. Man is, therefore, more normal and his fellowmen are usually happier, if he has a regular outlet for his creative mastery—desiring instincts *via* some sort of manual work which makes a sublimation of energy possible.

(vi) *Matter subservient to Spirit* : The idealism of Gandhiji does not despise material goods ; it has a place in it for material goods and comforts of life necessary to a refined, civilised and moral life. He has often said that he could carry spirituality to the masses only through bread, through the capacity to satisfy better their physical needs. Thus he believes in an intimate connection between matter and spirit. However, material possessions are merely a means to a higher life and not an end in themselves. In the materialistic concept of life no limit is put upon possession and the enjoyment of material objects except the limit of the physical capacity of the individual. Multiplication of goods and wants, far from being considered a hindrance to higher life, is regarded as a measure of civilisation and culture. There is a growing demand for the raising of the standard of living and the comforts of life which is met by the advance of science. This, to a large extent, generates a desire for sense-enjoyment and an inordinate appetite for the things of the body. This leads to desire, passion, love of power and ostentation which result in the spiritual and moral slavery of the individual. His will is enervated and his personality lost. All these are by no means signs of healthy physical life. The following words of the *Gita* which are daily repeated in the Ashram prayer embody the idealism of Gandhiji :

> Man musing on the subjects of sense,
> Conceiveth an attachment for these,
> From attachment ariseth desire,
> From desire anger cometh forth,
>
> From anger proceedeth delusion,
> From delusion confused memory,
> From confused memory destruction of reason,
> From destruction of reason he perishes.

The social economy which the Wardha Scheme envisages and is calculated to bring about is one in which no undue emphasis is placed upon material life. With the decentralisation of commerce and industry the possession of material goods will be automatically limited and regulated. The system prepares every child to bear his part in such an economy and so make it practically possible. It aims at making every village self-sufficient and thus removes the cause for expansion of commerce which leads to violence and exploitation. Its inherent limitation of private property and possessions prevents unhealthy desire and becomes a means to the attainment of higher things of life. Psychologically, it prepares the minds of the children for a spontaneous and willing participation in such an economy of life which values peace above plenty and simplicity above ostentation.[95]

---

95. J. B. Kripalani : *The Latest Fad,* pp. 85-87.

6. (a) *Naturalism of the Gurukula System*: The dominance of supernaturalistic and idealistic philosophies in the Gurukula system do not necessarily and entirely rule out naturalism. As every educational system is eclectic in nature, it would not be idle to look for naturalistic tendencies even in the predominantly supernaturalistic system of the Gurukula.

(i) *The Inherent Goodness of Man*: The aspect of the Gurukula that is so closely akin to Rousseau's naturalism is the belief in the inherent goodness of man and the distrust of human society. Man is a particle of the Divine Being and as such, he is divine ; he must, therefore, be good. It is human society that spoils him. In his formative years, therefore, he must be drawn away from society and for sixteen or more years must be kept and nurtured in an environment more suited to his divine nature and free from the impurities of life : It must be pointed out, however, that the distrust implied here does not apply to society in the villages, but only to society in the cities and towns which are the breeding places of vice and wickedness of all kinds : The rural society, by reason of its simplicity and sincerity, is always held up as an ideal and it is significant that the site of a Gurukula is preferred to be in rural areas. Anyway, it is considered best that the Gurukula be situated away from human habitation so that the chances of contamination may be reduced to a minimum.

A point on which the naturalism of the Gurukula differs from that of Rousseau is that while the French philosopher could not trust the teacher with the education of the young, the Gurukula considers the teacher as of utmost importance, for without the influence and guidance of the teacher the child cannot attain himself. It needs to be remembered, however, that the Gurukula teacher is an ideal personality like the teacher of the old Vedic times :

> The teacher was to be a very store-house of knowledge, full of sympathy and charity, cheerful and lively and of engaging manners ; leading a pure and blameless life, orderly in habits and regular in routine, gifted with a sense of proportion and having the courage of conviction ; with a magnetic personality ; capable of enforcing discipline ; with an optimistic outlook on life, and intent on social service. He was to be kind to all, and gentle and pure in speech. He was to have a passion for profundity and to live by begging. The teacher must work with heart and soul, and be like a parent unto his disciples. He must add the force of his example to the influence of precept: the teacher was not what he taught, but what he was.[96]

(ii) *The Importance of Physical Nature in Education*: But if the Gurukula does not trust society with the education of the child lest it should spoil him, it gives to physical nature a great deal of importance in the function of education. Both man and nature are embodiments and manifestations of God. For supernatural education it is necessary that the child should be brought into intimate contact with both. Man, however, through the exercise of his free will has generated unrighteousness and his thoughts and ways are evil. Therefore, the child should be kept

96. S. V. Venkateswara : *Indian Culture through the Ages*, p. 78.

away from him, except that he may and should come into contact with such men as have realised the Infinite and live holy lives. There are his teachers. Physical nature is unspoilt. The Indian sages lived in the midst of nature and realised themselves because in nature they were closest to the Supreme Being. Thus life lived in nature becomes the most natural mode of education—education that is to bring about the full development of the individual resulting in a realisation of self with God, involving the fullest development of all the powers within him.

(iii) *The School as a Home* : An important naturalistic feature of the Gurukula is the emphasis laid on the school being a home, though with a difference. If it believes in removing the child at an early age for a number of years from the influence of society, it also insists that the school should be a home in the highest sense of the terms. As a matter of fact, the child is removed from one home to another. The teacher becomes the father in the full sense of the term, giving all his time and talent to the development of the child. The wife of the teacher takes the place of the mother and their children become the child's brothers and sisters. The aim of the Gurukula is thus to secure the inestimable advantage of home life in the training of the child and hence the school is made to approximate the home as far as possible.

(iv) *The Gurukula attitude to sex* One serious drawback in the home atmosphere of the Gurukula is, however, the absence of the other sex as a factor of normal home life. In ancient times when the pupil lived right in the home of the teacher, this normal condition was satisfied. But in the modern Gurukula, the conditions are different. It is argued that " the wife of the Acharya, an elderly dame, is approached as mother. Her company should make up for the deficiency which the absence of the female sex may create in the boys' Gurukula ".[97] This statement clearly recognises the fact that a life in which the influences of the other sex are absent is deficient, and suggests that the deficiency can be made up by the wife of the Acharya. The argument is, however, a bit lame. The elderly dame can very well take the place of the mother ; but she cannot take the place of a sister of almost equal age who is the playmate of her brother day-in and day-out. The situation is made worse by the Gurukula opposition to co-education :

> What the advocates of the Gurukula demand is celibacy, not only in the *letter* but in the *spirit*. Any romantic passion or fancy that crosses a youth's breast robs him of life's essence. His will is weakened, and the power of initiative that be in him is gone as a result of a condition of lethargy which love-musings induce. It is on this account that we pit ourselves against co-education. We keep the girl out of the way of the boy and vice-versa because the sight of the one gives rise to erotic dreams in the mind of the other which disturb his or her mental peace, so necessary for the harmonious development of the adolescent man and woman.[98]

There may be good reasons for separating boys and girls ; but to banish the girl from the sight of the boy for such a long time and with

97. Chamupati : *The Aryan Ideal of Education*, p. 7.
98. *Ibid.*, pp. 6-7.

such rigour is not natural and might entail serious repercussions on the mental and moral outlook and emotional development of children.

(v) *Endowment and Environment*: The naturalism of the Gurukula is more the naturalism of environment than of endowment. It does not entirely disregard endowment for it does believe in the influence of heredity. " Swami Dayananda believes that the character of the mother influences the character of the child in the womb. Therefore, the upbringing of the child begins not at its birth but at the conception." [99] The hereditary influence on the child is sought to be controlled by means of food taken at and during the time of conception since food is believed to have an effect upon the bodily and mental development of the child.[100] Similarly, the Gurukula naturalism does take account of the natural powers of the child and the need to develop those powers through education.[101] But it is the emphasis on environment—both protective and nourishing—that is one of the outstanding features of the Gurukula. While recognising the necessity of the free development of inborn powers and capacities of the child, the Gurukula believes that it is not the end of education to let the child grow as a savage without proper direction of some of those powers secured through a well-planned environment and proper safeguards. Safeguards are after all as natural an element of life as any other. There is no repression, there is only redirection. It may even be said that the development that takes place in such an environment is perfectly natural, for the child knows that environment only and no other, and proceeds to react to it. From the point of view of the child the growth may be regarded as natural; but it may be pointed out that from the point of view of life as it is in the world at large it is far from natural. We need not debate the point; but only state that, in the Gurukula, conflicts of severe kinds, such as that of sex, are kept out on the ground of wise protection, and the charge of unnaturalness is met by saying that protection is a natural condition of civilised society and strengthens character ultimately by keeping it from evil influences in the most damageable years of life.

(b) *Naturalism of the Visva-Bharati System* Tagore's naturalism springs from his reaction to the conditions of school life prevalent in his day and from his conception of the type of life suited to the physical conditions of India and handed down through the ages by a racial inheritance and social tradition.

When the Aryans entered India, they found themselves in a land of vast forests, and their mode of life and thought came greatly to be influenced by their environment. Indian civilization had thus its birth in the forests and it took a distinct character from this origin and environment. " All the modern civilizations," says Tagore, " have their cradles of brick and mortar." [107] This ordinarily tends to interpose a barrier between man and nature. But in India, the cradle of civilization having

---

99. Dayananda: *Satyartha Prakasha*, p. 42, footnote.
100. *Ibid.*, p. 43.
101. *The Prospectus of the Gurukula University*, 1927, p. 63.
107. *Sadhana*, p. 3.

its roots in nature, there sprang up between man and his natural environment a relationship in those early days which seems to have embedded itself in the sub-conscious mind of the race. It affected its life to such an extent that it makes the Indian yearn for life in the lap of nature which he regards as his true home.

Tagore also believes in the unity of all life or creation. If all life is one, it seems natural for man to live in association and harmony with the rest of creation. Not only is it natural : it seems the only way in which life should be lived if it is to be lived in its proper setting and with the influences around it that were designed by Providence to be its constant nourishment. " When man leaves his resting place in universal nature, when he walks on the single rope of humanity, it means either a dance or a fall for him." [108]

Carrying this principle of *life in the midst of nature* into the field of education, Tagore tells us how, when he was sent to school, " all of a sudden I found my world vanishing from around me, giving place to wooden benches and straight walls staring at me with the blank stare of the blind ".[109] In an answer to the question asked him in Moscow, he elaborated the same idea in the following words :

> I have my natural love for life, for nature, and for my surroundings where I have my dear ones ; and to be snatched away from these natural surroundings with which I had all my inner deeper life of relationship, and to send me an exile to the school, to the class with its bare white walls, its stare of dead eyes, frightened me every day. When I was once inside these walls, I did not feel natural. I was absolutely a fragment torn away from life and this gave me intense misery because I was uprooted from my own world and sent to surroundings which were dead and unsympathetic, disharmonious and monotonously dull.[110]

In all this Tagore sees " that man's intention is going against God's intention as to how children should grow into knowledge ".[111] He revolts against such a system of education in which the child's life is gradually weaned away from nature and in which education by sympathy, which makes our life in harmony with all existence, is neglected. " We rob the child of his earth to teach him geography, of language to teach him grammar. His hunger is for the Epic, but he is supplied with chronicles of facts and dates." [112] He believes that children should be surrounded with the things of nature and that their minds should be allowed to stumble on and be surprised at everything that happens around them. But what happens in a school instead is that every day, at the same hour, the same book is brought in and poured out to him. The child's attention is thus never hit by the chance surprises which come from learning from nature.[113]

---

108. *Ibid.*, p. 10.
109. *Personality*, p. 114.
110. Rabindranath Tagore : " My School ", *The Modern Review*, Jan. 1931.
111. *Personality*, p. 115.
112. *Ibid.*, p. 116.
113. C. F. Andrews : *Thoughts from Rabindranath Tagore*, p. 196.

How can this wrong method of education be abandoned and replaced by the right one ? To that question, Tagore has several important answers to give :

(i) *Children's love of communication with nature* : In education, it is important to retain the innate power of children to establish immediate communication with nature. Their bodies and minds thirst for sunlight and air as flowers do ; their desire is for a personal experience of things ; they accept the world naked and simple ; and they want to be natural with nature. "This growth of experience leads to forming instincts which is the result of nature's own method of instruction."[114] This is illustrated in the following passage describing how personal experience of trees helps children in getting useful knowledge about them :

> The boys of my school have acquired instinctive knowledge of the physiognomy of the tree. By the least touch they know where they can find a foothold upon an apparently inhospitable trunk ; they know how far they can take liberty with the branches, how to distribute their bodies' weight so as to make themselves least burdensome to branchlets. My boys are able to make the best possible use of the tree in the matter of gathering fruits, taking rest and hiding from undesirable pursuers. I myself was brought up in a cultured home in a town, and as far as my personal behaviour goes, I have been obliged to act all through my life as if I were born in a world where there are no trees. Therefore, I consider it as a part of education of my boys to let them fully realise that they are in a scheme of existence where trees are a substantial fact, not merely as generating chlorophyll and taking carbon from the air, but as living trees.[115]

This criticism would show that the teaching of natural sciences in our schools is not natural by any means. The kind of botany that is being taught is so impersonal and unpractical that it does not interest the child half as much as the facts that he himself will discover through his perfectly natural contact with plants and trees. Furthermore, what he discovers in this natural manner is what is useful to him in his dealings with the world around him, and so it is interesting, realistic and practical. It may be contended that the properties of plants which the " impersonally " taught science explains are necessary to scientific knowledge and cannot be neglected. That is true ; but Tagore's contention is that this should *follow* upon what the child himself discovers about the tree or the plant in his daily intercourse with nature. It is only when the child has known the tree intimately by his handling of it in all its aspects that these other " scientific " facts should be brought to his attention. Then will the child's interest in the tree be so personal that the scientific facts will be taken in by him with an unusual avidity and interest.

(ii) *The use of natural instruments in the acquisition of knowledge* : In the acquisition of knowledge man must make use of the instruments given to him by nature for that purpose. Tagore points out that one such instrument which is so much neglected in the civilized society is our feet. The soles of our feet are so made that they become the best

---

114. *Personality*, p. 118.
115. *Ibid.*, pp. 118-9.

instruments for us to stand upon the earth and to walk with. Of all the limbs, the soles of the feet are the best adapted for intimately knowing the earth by their touch " for the earth has subtle modulations of contour which she only offers for the kiss of her true lovers—the feet ".[116] A great deal of education can come through the free contact of the soles with the earth on which we walk. Our feet respond unconsciously to the subtle suggestions coming from the earth and adjust their muscles with great rapidity at the least indication. This is how they can save themselves from the intrusion of thorns, even while treading upon them, and walk barefooted on a path without the least discomfort. One often sees zigzag footpaths across perfectly plain fields and wonders why they are not straight. However, there is a reason behind this apparent eccentricity. Even the flattest of the surfaces of the earth have their dimples which may not be seen by the naked eye, but are discernible by the soles of the feet which have been allowed to receive their normal education of contact with the earth. In walking, such feet unconsciously avoid these dimples or diminutive hills and dales to avoid discomfort. The sense of touch in the soles of the feet thus becomes a means of education in adjustments of muscles. Contrast with this kind of education of the feet what Tagore says about his own experience

> I have again to confess that I was brought up in a respectable household and my feet from childhood have been carefully saved from all naked contact with the dust. When I try to emulate my boys in walking barefoot, I painfully realise what thickness of ignorance about the earth I carry under my feet. I invariably choose the thorns to tread upon in such a manner as to make the thorns exult. My feet have not the instinct to follow the lines of least resistance.[117]

Tagore is not advocating the banishment of foot-gear altogether from men's use even when he says that pampering our feet with socks, slippers and shoes " amounts to a grievance against God for not giving us hooves instead of beautifully sensitive soles ".[118] What he does, however, advocate is that, during their period of education, children should be allowed to go about bare-footed, as children always want to do, so that they may be able to gain this valuable education in the knowledge of the earth and its cantour almost with no effort. The natural instruments of knowledge must be used ; for through them, nature gives instruction to her children.

(iii) *Being vitally savage* : It is essential that " men should have some limited period of their life specially reserved for the life of the primitive man " [119] or, that " for our perfection we have to be vitally savage and mentally civilized ".[120] As soon as the child is born society gets hold of him, imposes on him all its habits and conventions, and deprives him of the right to vegetate naturally. He is " snatched away from the open arms of the earth, water, and sky, from the sunlight and

---

116. *Ibid.*, p. 119.
117. Rabindranath Tagore : *Personality*, pp. 119-120.
118. *Ibid.*, pp. 119-120.
119. *Ibid.*, p. 122.
120. *A Poet's School*, Visva-Bharati Bulletin No. 9, p. 6.

air ".[121] The free and natural mode of life is denied to him. He frets and cries about it as if in revolt against the grown-up man's inroads upon his instinctive and natural life, but ultimately yields to greater power and loses the freshness and naturalness of his life. This does not imply that custom and convention should be banished from life; they have a place in the process of civilization of man, but they do not belong to the beginning and end of life—they belong to the middle of a man's career. They should not intrude upon age, for old men must be allowed to grow old in peace and beauty; nor should they be imposed upon children to whom they mean nothing but misery.

(iv) *The complete world of the child* The child's world is a complete world with a wholeness and harmony about it which satisfies the child. But the school is far from being a complete world. Relative to this aspect of the school, Tagore describes his own experience as follows

> Therefore what tortured me in my school days was the fact that the school had not the completeness of the world. It was a special arrangement for giving lessons. It could only be suitable for grown-up people who were conscious of the special need of such places and therefore ready to accept their teaching at the cost of dissociation from life.[122]

(v) *Collaboration with nature* What Tagore has in mind, as he draws this opposition between the unnatural life of the school and the life that a boy might lead, if he were to develop according to the dictates of nature, is made clear in the account he gives of the education that he tried to give to his own son

> This is why when I had to face the problem of my own son's education I was at a loss to give it a practical solution. The first thing that I did was to take him away from the town surroundings into a village and allow him the freedom of primeval nature as far as it is available in modern days. He had a river noted for its danger, where he swam and rowed without check from the anxiety of his elders. He spent his time in the fields and on the trackless sand-banks, coming late for his meals without being questioned. He had none of the luxuries that are not only customary but are held as proper for boys of his circumstance. For which privations, I am sure, he was pitied and his parents blamed by the people for whom society has blotted out the whole world. But I was certain that luxuries are burden to boys. They are the burdens of other people's habits, the burdens of the vicarious pride and pleasure which parents enjoy through their children.[123]

Thus Tagore develops the idea of an education "in collaboration with Mother Nature".[124] He advocates this through "an institution where the first great lesson in the perfect union of man and nature, not only through love but through active communication, can be had unobstructed.[125]

(vi) *The value of simplicity*: Yet another ideal that emerges from Tagore's naturalism is that of simplicity. Apart from its moral

---

121. *Personality*, p. 122.
122. *Ibid.*, pp. 123-4.
123. *Ibid.*, pp. 124-5.
124. A. X. Soares (ed.): *Lectures and Addresses by Rabindranath Tagore*, p. 141.
125. *A Poet's School*, Visva-Bharati Bulletin, No. 9, p. 8.

significance, simplicity is valuable as a method of naturalism. There is no thought in the mind of Tagore to idealise poverty such as prevailed in the middle ages—where poverty became the end rather than the means, but he does believe that " poverty is the school in which man had his first lessons and his best training ".[126] Poverty introduces man to the natural mode of life. A millionaire's son has got to learn to walk like the son of a poor man though his circumstances in life are such that it would do for him never to learn to walk. Poverty brings man into direct and complete touch with life and the world, since he has to do things for himself and must handle things that are of everyday life. These things are done for a rich man by others, so he does not know them and may be said to live mostly by proxy. This may be good for one's pleasure and pride, but not for one's education. It narrows down man's acquaintance with and experience of things. The greater the possessions a man has the more limited becomes his personal experience with life and the world. The modern civilization greatly helps in the limitation of one's experience of life by the extraordinary output of things that not only are unnecessary to life but are appendages without which one would be better off

> Such an intemperate growth of things, like the rank vegetation of the tropics, creates confinement for man. The nest is simple, it has an easy relationship with the sky the cage is complex and costly, it is too much itself, ex-communicating whatever lies outside. And modern man is busy building his cage, fast developing his parasitism on the monster, *Thing*, which he allows to envelop him on all sides.[127]

Tagore speaks of his having come upon a Bengali translation of *Robinson Crusoe* as a great good fortune and considers the book as " one of the best books for boys that has ever been written." [128] " In *Robinson Crusoe* the delight of the union with nature finds its expression in a story of adventure in which the solitary man is face to face with solitary nature, coaxing her, co-operating with her, exploring her secrets, using all his faculties to win her help." [129] In the abundance of material aids to life which science has provided in our times, the opportunity for adventure which a desert island provides is lacking. This is by no means saying that children should be brought up in such an island ; but if they are thrown upon bare nature, they will develop in them a spirit of adventure and zest of discovery and desire to do things, all of which is invaluable to a growing personality. To be face to face with solitary nature with all ready-made convenience of modern life banished is the kind of life in which the primitive man lived and developed his latent qualities, which would have been stunted if he had been surrounded with the luxuries of modern life. Tagore regards wealth as a golden cage in which the children of the rich

---

126. *Personality*, p. 121.
127. Rabindranath Tagore : *A Poet's School*, Visva-Bharati Bulletin No. 9, p. 4.
128. *Ibid.*, p. 6.
129. *Ibid.*, p. 7.

are brought up with the result that their natural powers become dead.[130] Therefore, in his school "much to the disgust of people of expensive habits, I had to provide for this great teacher,—the barrenness of furniture and materials,—not because it is poverty, but because it leads to a personal experience of the world".[131]

(vii) *The importance of right atmosphere*: One of the cardinal principles of Tagore's philosophy is that the sub-conscious minds of the children are more active than their conscious intelligence. This subconscious mind, like the tree, has the power to gather its food from the surrounding atmosphere. The atmosphere of a school is more important in its effect and results than rules and methods, building appliances, class teachings and text-books:

> The earth has her mass of substance in her land and water. But, if I may be allowed figurative language, she finds her inspiration of freedom, the stimulation of her life, from her atmosphere. It is, as it were, the envelopment of her perpetual education. It brings from her depth responses in colour and perfume, music and movement, her incessant self-revelation, continual wonders of the unexpected.[132]

At Santiniketan one constituent of the atmosphere is nature. Classes are held as far as possible in the open air—in the groves and under the shade of the trees. The peace and beauty of nature, amid which the children live and learn, has an abiding influence on the young minds, tending them to love all that is peaceful and beautiful. The open spaces around the groves, the trees, the dawn and the evening and the moonlight, the winds and the great rains carry their own message to the sensitive and receptive minds of the young. Life such as this creates in the children a sensitiveness of soul which Tagore considers necessary in enabling them "to respond to the deeper call of reality" and so to be "weaned away from the lure of the fictitious value of things".[133] Of the influence of Nature Tagore speaks as follows addressing the students of Santiniketan:

> We must not, however, forget the part that the environment played in our life. The surrounding Nature was a great teacher to us. SHE moulded our daily life in the spirit of beauty and delight, harmony and colour, and caused us to meditate upon our inner being. It was Nature that inspired me to write songs, dramas and poems dedicated to her. We had our dances and seasonal festivals and the whole

---

130. In *The Parrot's Training* a satire on mechanised education, Tagore tells of a bird—a parrot—who came into the hands of a Raja. The bird sang all right, but never recited scriptures. It hopped pretty frequently, but lacked manners. It was, therefore, dubbed as ignorant. Desiring to educate the bird, the Raja summoned the *pundits* who decided that the ignorance of birds was due to their natural habit of living in poor nests. Therefore the first thing necessary for the bird's education was a suitable cage. A golden cage was built, *pundits* were engaged to write text-books. The bird's throat was so completely choked with the leaves from the books that it could neither whistle nor whisper. But nature occasionally triumphed over training, and the bird sometimes fluttered its wings. This was considered reprehensible, so its wings were clipped. With text-book in one hand and baton in the other, the *pundits* gave the poor bird its daily lessons. Eventually it died.

131. *Personality*, p. 122.

132. Rabindranath Tagore: *A Poet's School*, Visva-Bharati Bulletin No. 9, p. 12.

133. *Ibid.*, p. 9.

place actually rang with the students' happy voices and music. Surely Nature helped them and us in forming our outlook and creating an atmosphere.[134]

(viii) *The breath of culture* : Another element in the atmosphere that Tagore would emphasize is what he calls the breath of culture which the students would breathe in as naturally as they breathe air. In fact this is the best way of making any cultural influence effective. Culture, like character, is not taught, but caught; and the more natural the way in which it is transmitted the more lasting is its influence likely to be. Tagore himself had been brought up in circumstances where he inhaled this breath of culture more or less unconsciously. His brothers and cousins had natural artistic powers. His was a family where literature, music and art had become instinctive.[135] Tagore would desire for children an atmosphere where they would imbibe unconsciously and naturally the racial and national heritage through the influence of traditions and so lay hold of the concentrated wisdom of the ages. The vehicle of this kind of cultural influence would be the social and intellectual life of the school guided and enriched by the personalities of the teachers, who live in a world of ideas, keenly responsive to all that is great and beautiful in the realm of nature and of the human mind.

It may be argued that the intellectual and cultural influences that are thus intended to be brought to bear upon the minds and lives of the children through a particular kind of an atmosphere are too subtle and difficult for the children to assimilate or even to respond to. Tagore does not think so. First of all, the ideas do influence the sub-conscious mind and the influences will, in fulness of time, grow and fructify. Secondly, we should not underestimate the abilities of children in certain directions.[136] If these influences were brought to bear merely through certain regulations and methods or through text-books, they might not have much effect; but if they are transmitted through the living personalities of the right kind of teachers, they have the desired effect upon the children. Tagore writes with approval and enthusiasm of a certain young teacher who taught in his school for only a year and whose exceptional career as a teacher was cut short by death :

They (the boys) would go with him to the forest when in the spring the *sal* trees were in full bloom and he would recite to them his favourite poems,

---

134. "An Address", *The Visva-Bharati Quarterly*, August 1938.
135. *Personality*, p. 139.
136. In her recent book *Education for a New World*, Dr. Montessori writes with knowledge and conviction of " the great powers of the child " in the following terms :
" Already the psychic life in the new-born has aroused great interest, scientists and psychologists having made observations of babies from three hours to five days after birth. The conclusion of these is that the first two years of life are the most important. Observation proves that small children are endowed with special psychic powers and points to new ways of drawing them out—literally educating—by co-operating with nature. The child's constructive energy, alive and dynamic, has remained unknown for thousands of years, a mine of mental treasure, just as the man who first trod this earth knew nothing of the immense riches that lay hidden in its depths. So far is man from recognising the riches that lie buried in the psychic world of the child, that from the beginning he has continued to repress those energies and grind them into the dust. Now for the first time a few have come to suspect their existence, a treasure which has never been exploited, more precious than gold, the very soul of man."

frenzied with excitement. He used to read to them Shakespeare and even Browning,—for he was a great lover of Browning—explaining to them in Bengali with his wonderful power of expression. He never had any feeling of distrust for boys' capacity of understanding; he would talk and read to them about whatever was the subject in which he himself was interested. He knew that it was not at all necessary for the boys to understand literally and accurately, but that their minds should be roused, and in this he was always successful.[137]

These then are the main elements in Tagore's naturalism. He advocates life in, and in sympathy with, nature, since all life has an underlying unity. He recommends savage life like that of Robinson Crusoe on the desert island, so that the child may have an experience of the world at first hand. He believes in education through atmosphere which is a natural way of giving to the children their share of the social and spiritual heritage of the nation and of mankind.

(c) *Naturalism of the Jamia Millia Islamia System*: Though Zakir Husain believes that education is essentially an enterprise to help the divine in man, he also holds that this enterprise "cannot afford to ignore the animal in him" and "has to take cognition of biological human individuality as well as of the absolute, objective, transcendental values".[138] With the acceptance of this position goes the acceptance of biological naturalism. This is not, in any sense, a negation of idealism, much less an avowal of materialism, as a principle of life. Biological naturalism in this case only calls attention to the necessity of adjusting the educational process to the conditions and needs of the growing organism and suggests ways and means by which this can be best done. It brings to the educator's attention the physical and mental laws which govern the life of the educand, so that the educator may help the growth of the educand accordingly.

(ii) *Recognition of individual differences* The fundamental principle of Zakir Husain's naturalism is the recognition of individual differences which can be classified in various "types" such as the theoretical, the aesthetic, the religious, the egocentric, the altruistic and the social. "We as teachers," says he, "can never do too much to understand the individual differences of students whose education is placed in our hands. We cannot succeed in helping every mind to grow and develop in one and the same way."[139] From this fact of individual differences is deduced the basic axiom of educational process by Kerzchensteiner whom Zakir Husain follows, namely, that "the education of the individual is only possible by means of cultural goods whose mental structure is fully or at least partially adequate to the stage of development of the individual life-form".[140] The method of education, must, therefore, vary with the type of mind to be educated:

137. *Ibid.*, p. 141.
138. Zakir Husain: *What I Believe*, a radio talk (unpublished).
139. *Welcome Address to the All-India Education Conference*, 1934, p. 9.
140. *Loc. cit.*

The theoretical type of mind will find admittance to the whole cultural heritage of his group or of humanity at large only through the gateway of theoretical scientific goods. The door of cultural life will remain closed to the active, technically-minded boy if you impose on his unwilling mind the goods of the contemplative or aesthetic type. The door can be opened for him primarily by the key of technical work and by familiarity with technical goods. By the full development of his mind in this manner he shall be able finally to partake of other cultural goods as well.[141]

Starting with this axiom of " nurturing the youth on what they are adapted by nature to assimilate "[142] Zakir Husain suggests that " the one-sided abundance of theoretical educational goods with which our curricula of studies are over-burdened "[143] must be curtailed. We know that a large part of the information that we impart to children in schools is unassimilated, and think the mind defective that does not assimilate. But really speaking, it remains unassimilated because it does not correspond to the mental make-up of the child. Therefore, in the choice and arrangement of the subjects of instruction and in the relative emphasis given to them due consideration must be given to the mental constitution of the children that are to be educated.

(iii) *Learning through manual work* : At the primary stage when the children are bursting with active energy and insist on doing things with their hands, we cannot hope to educate them by making them sit silent and grim, brooding over books, and unwillingly swallowing unassimilable information. The children think as it were with their hands and can learn only by doing. This almost universal quality is the educator's opportunity and must determine the principle on which education should be organised. In the primary schools, adequate provision should be made for the development of the attitude of activity which is typical of all healthy children and " to make even the learning of the processes of reading, writing and calculating easier and more efficient by co-ordinating them closely with manual work ".[144] In the past, of course, there has been an emphasis placed upon manual work, but from the wrong point of view. It was regarded that manual work was good inasmuch as it taught the pupils dignity of labour and helped to increase the dexterity of hands. It was put in the school curriculum as an additional or extra subject with no relation whatever to other subjects. This serious mistake was the result of a lack of understanding of the educational process which Zakir Husain points out as follows :

But now that we have been forced to think, let us be honest and thorough. Would patchwork reforms help ? Would 'manual work', and 'vocational bias' and 'practical bent', and 'introduce hygiene and general science', or 'add civics', or even 'change the medium of education and examination' suffice to give the

---

141. *Ibid.*, p. 10.
142. Zakir Husain : *Presidential Address to the Twentieth U.P. Secondary Educational Conference,* 1941, p. 13.
143. *Ibid.*, p. 10.
* *Ibid.*, p. 6.
144. Zakir Husain : *Welcome Address to the All-India Educational Conference,* 1934, p. 11.

right direction? I am afraid they cannot. Only a proper understanding of the educational process can show us the way.[145]

It is now realised that between what is known as intellectual labour and manual labour there is an organic connection, and only when this connection is realised that the manual subjects come into their own. " For as a matter of fact, intellectual work has grown out of the manual, which is the basis not only of all art, but also of science. Healthy theoretical interests have always emanated from practical ones."[146]

For the child, work belongs to the category of play and play is natural. In the activity of the child, one is able to see how aimless play grows into purposive, joyful work, and how at times, under cover of half-understood catchwords, it seeks to remain just play, refusing light-heartedly to concede that life is, after all, a more serious affair. It is also evident how the irresistible urge of boys and girls of a certain age to do things with their hands, to put things together and to take them to pieces can be used as the most potent force in the service of an all-round education.[147] Schools must, therefore, provide as the basis of all curriculum ' work ' or ' purposeful activity ' Zakir Husain has no quarrel with names ; he would have " no objection even to just ' activities ' unless I see lurking behind it a secret attachment to that ' educational expressionism ' which abhors all objectivity, fights shy of thoroughness and insists upon the cultivation of the grass-hopper and butterfly type of mind as the only aim appropriate to the dignity of the educator and the growing nature of the child ".[148] He believes that a sound system which will fulfil the requirement of mass education in a democracy will be one which will provide not only knowledge-content but also habits and attitudes and which will be based mainly on a productive manual activity whose needs will naturally lead to various correlated fields of knowledge.[149]

(iv) *Diversification at the secondary stage* At the primary stage there should be a close observation of the aptitudes of the pupils with a view to discovering what their mental constitution is. Then at the secondary stage there should be a diversified system of schools conforming to the differentiation that makes itself noticeable in the psychological make-up of the educand at this stage. Sound education can be built on that which gives to the educand's mind its characteristic relief; it will have to build on what nature seems to indicate as the destiny of the educand, on what he seems to be called to do, on his vocation. Zakir Husain, therefore, recommends four types of secondary schools in conformity with the various types of mind that have to be educated : the

145. Zakir Husain: *Presidential Address to the Twentieth U.P. Secondary Educational Conference*, 1941, p. 4.
146. *Ibid.*, p. 7.
147. Zakir Husain: *Address at the All-India Educational Conference*, 1941 (unpublished).
148. Zakir Husain: *Presidential Address to the First All-Sind Educational Conference*, 1942, pp. 6-7.
149. *Ibid*, p. 7.

literary, scientific, artistic and technical schools.[150] The work of each type of school will be so arranged as to allow the pupils to live the values which have been the basis of their classification and which are the distinguishing feature of their school. As the instruments of education will not be arbitrarily determined, but will have an intimate relationship with the psychological make-up of the pupils, it will not be necessary to impose education from outside and make the school only a place of passive receptivity. The pupils will be able to experience actively what they learn to experiment, to discover, to work, to live. All these will be vocational schools in a sense which is different from the sense in which the term is being wrongly used. To Zakir Husain's mind, vocational education is neither different nor apart from naturalistic education that follows the nature of the child. It is a line of development dictated by nature itself. The vocational education as at present understood is, to his mind, nothing but a system of undiscriminating conscription imposed by a society that is wrongly organised and totally lacking in judgment.[151] He explains the correct meaning of vocational education as follows :

> You will agree with me that education can only be a process through which a mind fulfils its destiny, that education can only be vocational. For only by the nurture and cultivation of that which gives to a mind its specific characteristic quality can that mind become cultivated, educated, and is brought to its full development. And while it grows in its specific virtue by the aid of cultural goods which conform it, it assimilates and partakes also of various other cultural goods with which its growing activity brings it into contact.[152]

(v) *General and vocational education* : This raises the question of the distinction and relation between general education and vocational education. It is a mistaken belief that we must give first of all a general education to be followed by a vocational education. Sometimes a conciliation between the two is effected by supplementing a programme of general education with what has been called a ' vocational bias '. Zakir Husain regards this so-called general education as " nothing but a superficial dressing, a mere hotch-potch of information miscalled education put together irrespective of the mental structure or life-form of the educand ".[153] The passage is not from general to vocational, but from vocational to general education. General education can only be " the flower and the fruit of a life-time started well on its destined course by an *education based on its characteristic psychological make-up*, on the characteristic qualities indicating what nature demands ".[154] General education or culture of the whole man is impossible without the development of that part of the mind which gives it its characteristic relief. Even in the high schools of the types that he suggests, Zakir Husain

---

150. This was said in 1942. In 1934, he suggested only three types : High Schools of Languages and Social Sciences, High Schools of Mathematics and Natural Sciences, and High Schools of Technical Work. (Welcome Address to the All-India Educational Conference, 1934, p. 11).

151. Zakir Husain : *Presidential Address to the Twentieth U.P. Secondary Educational Conference*, 1941, pp. 8-9.

152. *Ibid.*, p. 9.

153. *Ibid.*, pp. 9-10.

154. *Ibid.*, p. 10.

cautions that " we shall probably have to take care that the pupil's time is not claimed exclusively by the demands of compulsory instruction and that time and opportunity are provided him to follow his own inclinations ".[155]

Just as vocational education is the basis and core of general education, so is it also the basis and core of what is called cultural education. Zakir Husain's meaning of cultural education is broad and is derived from what he has called the basic axiom of education. Speaking of the various types of secondary schools that he suggests, he makes the meaning clear :

> They will all—the technical as well as the literary—be places of culture, possessing equal merit. They will be organised as if self-sufficient units, not as a mere preparation ground for some other higher place, but those who acquire education and culture at any one of them will be entitled to rise high in the ranks of educational workers as those of another. All knowledge is knowledge ; all socially useful creative activity is praiseworthy. He who can devise an efficient tool or build a bridge is as much a benefactor of society as he who paints a picture or writes a book. Culture is not in words only but in all creative effort that utilises the past to build up the future.[156]

Zakir Husain's emphasis, then, on education according to nature and education calculated to give to the mind its real culture may be summed up in his own words as follows :

> Let us make up our minds to discard our exaggerated notions about the importance of unassimilated information. Let us strive for the real culture of the mind. Let us understand nature and honour humanity. Only by being helped to become what nature wants one to become can one offer one's best to the whole of which one is a part. Only by trying to become what one is intended by nature to be can one reach to the highest possible development as a human being. Only by seeking to meet the intrinsic needs of the individual minds shall we be able to provide for the all-sided development of national life.[157]

(vi) *Indianising the educational system* : Another principle that Zakir Husain enunciates is that the best growth of an individual is secured only if his mind is nourished by the goods of the cultural group to which he belongs. He says : " If, as we have seen, the individual mind can be educated only by the cultural goods adequate to its own structure, it is evident, that the cultural goods of the group to which one belongs, in which one is born and bred, must be the best means of its development and culture." [158] The first deduction from this principle is, as he puts it, " to Indianise our whole educational system ".[159] This has considerable significance for education in India. He points to the deplorable fact that

---

155. Zakir Husain : *Welcome Address to the All-India Educational Conference,* 1934, p. 11.
156. Zakir Husain : *Presidential Address to the First All-Sind Educational Conference,* 1942, p. 20.
157. Zakir Husain : *Presidential Address to the Twentieth U.P. Secondary Educational Conference,* 1941, p. 10.
158. Zakir Husain : *Welcome Address to the All-India Educational Conference,* 1934, p. 12.
159. *Ibid.,* p. 12.

so far " the measure of an Indian's culture has been his lack of appreciation, if not his utter dislike, for all that the Indian mind has created and stamped with its own peculiar character ".[160] If he has not rejected the creations of the Indian mind outright, he has shown an indifference to the cultural values of his country. This is a social malady for which education is responsible. The educationists have perhaps unconsciously accepted and fostered the noxious idea that a young man who passed his examination with credit did not need to have any sense of form and colour, or responsiveness to music and song, or reverence for the beautiful and the true.[161] Zakir Husain, therefore, suggests that we should strive " with all our might for a new orientation in the methods, systems and objectives of our education such as will ensure that Indians, after receiving education, become true Indians and not the collection of hybrid styles and mercenary workmanship which you see in a godown of second-hand furniture ".[162]

(vii) *Denominational schools* This same principle which has been applied in respect of the country, is further applied in respect of a community or a cultural gorup. Zakir Husain believes that " if in a place there are pupils belonging to a certain community and their schools seek to use for their education some of the cultural goods specific to that community the school does not for that reason become a bad school ".[163] It is obvious that a pupil will assimilate more readily the cultural goods of his own community than those of another ; moreover his nourishment on them will inculcate reverence for traditional and transcendental values peculiar to that group, and will suggest patterns and examples of life which will help the growing personality to discover its own true gifts. This, in the main, is the *raison d'etre* of the Jamia Millia since it attempts to educate Muslim boys on the cultural goods of the Muslim community. Zakir Husain thus sees a good many cultural and educational benefits in the denominational school which, while retaining its own peculiar character, should also become an integral part of the whole educational system of the country. One of the outstanding features of the Indian population is the multiplicity of its religious communities and cultural groups and attempts should be made to retain the variety of life thus offered in the situation so that it may enrich the life of the entire nation. While so much is urged on all hands against denominational schools, Zakir Husain's argument for retaining them, provided they were efficient schools and became a part of the national educational system, has many points to commend itself, if not on other grounds at least on naturalistic grounds. His argument is well worth quoting :

> All these benefits the non-denominational school must deny itself, and for the loss of so many educative influences, it has usually no compensation other than the pious and often unavailing profession of a desire to transcend communal distinctions.

---

160. Zakir Husain: *Presidential Address to the Twentieth U.P. Secondary Educational Conference*, 1941, p. 11.
161. *Ibid.*, pp. 11-12.
162. *Ibid.*, p. 12.
163. Zakir Husain: *Presidential Address to the First All-Sind Educational Conference*, 1942, p. 16.

This may agree with the demands of a nationalisation that seeks to destroy diversity and level everything down. But this demand is itself impolitic and improper, and will never be conceded. It is no more justifiable than the demand that in a democracy no citizen should have individuality, no associations should be formed on the basis of a common cultural or social interest and no allegiance should be professed except to that most undiscriminating and most variable of all gods, the majority. I do not believe that dogmatic assertions of a formless nationalism will ever be able to drive variety out of Indian life, to drill the different communities into a uniformity of amorphous character and impotent belief.[164]

Since the Jamia is still not fully developed, it is not possible to see all these ideals worked out in its organisation and routine. The principle of naturalism is, however, at work. The syllabus, in the primary stage, is a stimulating blend of mental discipline and physical development. The four principles on which it is organised are : (1) formal instruction must serve to develop initiative, not to thwart it ; (2) the mind should be alert by habit, with an impulse for activity, assertion and assimilation ; (3) the mind and body are partners, not accomplices ; and (4) the children must laugh as they learn so that they will love knowledge and rejoice in it.[165]

The first step is the training of the senses, the development of spontaneity, of inventiveness. There is no check on the child's interest. The mother tongue is taught by the story method for which the necessary literature and apparatus have been prepared. Then the child is taken on to projects which form the basis of instruction throughout the primary stage. A definite and conscious attempt is made to realise in all its fullness and variety the principle of learning by doing. Some craft is taught in almost all the classes as a form of work and the teaching of other subjects is co-ordinated with it. At the secondary stage, such methods are used as promote an enduring interest in knowledge and provide for more activity. The plan of diversification has not yet been possible for lack of funds, but students are watched throughout the primary stage as to their aptitudes with a view to finding out their types. If a course for which a boy has shown an aptitude is not available at the Jamia, arrangements are made for him to go to some other school where it is offered.

In regard to the Jamia being a natural place for the education of Muslim boys through the cultural goods of the community, " Muslims have on the whole accepted the Jamia Millia as representative of their culture and traditions, and the help they have given has forged links so strong that the Jamia Millia can claim to have realised its ideal of the relationship between the school and the community, between education and the cultural character of the people ".[166] As a general picture of what is being accomplished the following description from one of its teachers is suggestive :

Things that are natural or reasonable seldom strike the eye, and at first sight only little in the activities and methods of the Jamia will appear novel or

---

164. *Ibid.*, p. 17.
165. *The Jamia Millia Islamia Prospectus*, p. 3.
166. Mohd. Mujeeb : *Jamia Millia Islamia*, an unpublished article.

remarkable. But we will find a new spirit at work. He will find respect for humanity, belief in spontaneity and freedom, and emphasis on activities that make the acquisition of knowledge the strong and instinctive impulse which it, in reality, ought to be. He will find the school a lively place, the children unconstrained and natural in their behaviour.[167]

(d) *Naturalism of the Wardha System*: The Wardha System is a reaction against the formalism and pedantry of the present system of education just as the Renaissance was a reaction against medieval scholasticism and Rousseau's naturalism was a reaction against the decadent humanism. J. S. Ross [168] distinguishes between three types of naturalism. First, there is the naturalism of the physical science which concentrates its gaze upon external nature and thus finds it difficult to give a reasonable account of man himself. The second type of naturalism is mechanicalism which looks upon man as a machine and has given us the behaviourist psychology which, however, has rendered some service to education. The third type is founded on the notion of evolution and is called biological naturalism. It regards animal and human development as continuous and gives us the doctrine of the 'natural man'. It stresses the nature man inherits from pre-human ancestors and discounts his spiritual nature. The naturalism of the Wardha system is of the third type though it does not entirely discount the spiritual nature of man.

(ii) *The natural evolution of the individual and the race* It is claimed that the Wardha System "follows the natural evolution of the individual and the race, the evolution of all knowledge, art, science, philosophy and religion".[169] Man evolved from his animal state and slowly acquired the characteristics that distinguish him from animals. This evolution has been made possible by an education involving the two processes of observation and experiment. He observed the material nature around him, its ways and workings and then applied his hands to it, trying to make and fashion things. In these processes he used his senses, mainly his hands which shape things so cleverly, and delicately. Here we had the starting point of civilisation which kept on developing as man continued to apply his senses and hands to external nature. While doing this he discovered the laws of nature which led to the foundation of science. As he used his imagination, intuition and reason, he transcended the concrete into the realm of the abstract and laid the foundation of philosophy. The same processes of observation and experiment may be seen in the social realm. He organised clans, castes, classes and nations, introduced government and developed civic life. By this process the wild and violent man of the jungle has become civilised. The defect of the present system is that it introduces the child to the finished product of knowledge acquired through the life of the race without having been taken through at least the basic and most important steps

---

167. Mohd. Mujeeb: *Jamia Millia Islamia*, the Visva-Bharati Quarterly, Aug.-Oct. 1946, p. 113.
168. J. S. Ross: *Groundwork of Educational Theory*, p. 86.
169. J. B. Kripalani: *The Latest Fad*, p. 14.

leading to civilisation. Now that man "has reached some height he has conveniently forgotten the ladder by which he rose. Sometimes he tries to remove it thinking that his work is done ".[170] His knowledge, therefore, has no foundation in experience.

It is however certain that if the system of his education follows the natural course of evolution of the individual and the race he will be educated better and quicker. All his capacities and not his brain alone will be exercised and consequently strengthened and evolved. His eyes, hands and other senses will also be trained.[171]

(iii) *Physical activity plus environment* A growing child needs a good deal of physical activity for his expression and unfoldment. His acquisition of knowledge follows from his occupation with interesting practical activity. In India the natural environment of the child abounds with possibilities of such practical activity. The most important and predominant characteristic of the life of the masses in India is work. "The one single important feature that dominates the life of every tiller of the soil, every craftsman and labourer who lives in this country is the single fundamental fact of work, or purposeful activity."[172] Thus for the child in India the purposeful practical activity comes from his environment. The Wardha System takes advantage of the child's natural surrounding of activity and combines it with the bent of the child's mind for practical activity. The combination takes shape in the craft which gives scope to the development of practical and purposeful activity and thus becomes the medium of instruction.

(iv) *The questions of child-labour and exchange-motive*: The method has been criticised on the ground that it will turn schools into factories and children into factory-workers. Further, since education is to be partly self-supporting, it would appear to be, even though in a small measure, an exploitation of child labour. According to K. T. Shah, "by trying to make education self-supporting, you will create in the boys from the very beginning a feeling of exchange motive which is, by no means desirable. I am sure that, if you involve the students in this economic muddle at the age of 7, a kind of slavery would creep in ".[173]

To the first objection Gandhiji answers as follows :

> The fact that the whole person in the boys and girls has to be developed through a vocation automatically saves the schools from degenerating into factories. For, over and above the required degree of proficiency in the vocation in which they are trained, boys and girls will have to show equal proficiency in the other subjects they will be expected to learn.[174]

It would hardly be right to say that the scheme involves an exploitation of child labour. If craft work was imposed on the children against their inclination it would certainly merit condemnation. If work goes against

---

170. *Ibid.*, p. 16.
171. *Ibid.*, p. 17.
172. K. G. Saiyidain: *One Step Forward*, p. 230.
173. Quoted in C. J. Varkey: *The Wardha Scheme of Education*, p. 92.
174. *Ibid.*, p. 93.

the grain of a man's nature, it becomes labour and drudgery. But if it agrees with and satisfies an inner craving in the nature of man, then it is not only not a drudgery but a source of satisfaction and pleasure:

If work is provided in the spirit in which the scheme envisages it, then work becomes a richly contributing factor to the development of the human mind and the human personality. It is not something imposed against the will of the growing individual by a relentless nature outside ourselves, but something for which our own inner nature is constantly craving, something through which we express the most fundamental urges and instinct of our nature. And I ask you: can education be of any use whatever to the growing generation unless it becomes a venue through which they can express their creative and constructive purposes? [175]

As regards the argument from 'exchange-motive' it may be noted that while the work of the pupils is to be sold, the pupils themselves are not to be involved in the transaction. No doubt they will know the economic value of what they have produced, but that is not going to make them slaves to money. On the other hand, it may impel them to do better until they are able to produce something that will gain a market. Nor does one become a slave by working. "Just as we do not become slaves of parents at home when we carry out their instructions, so the question of slavery should not arise at all in our proposed schools." [176]

Objection has been urged, and perhaps rightly, against the amount of manual work provided in the scheme on the ground that it places undue strain on the children. Another objection on a weightier ground comes from an editorial note in *The Modern Review*

If the training given in some craft is to be pecuniarily profitable, the pupils must go on making things mechanically. That would involve repetition of processes as if automatically. Has that much educative and intellectual value? That reminds us of some observations of an American educationist with considerable experience of manual training in schools, quoted by the *Indian Social Reformer*:

"The manual training exercises for the several years have been arranged with such variety as to insure sustained interest and to prevent irksome repetition of automatic unthinking reproduction. It seems to be intended that any process shall be discontinued as soon as it ceases to compel the student to think, that is, as soon as it becomes merely mechanical; and this is justified by the consideration that a mechanical process ceases to be of educational value to a student at the very point where it begins to be of industrial value to an apprentice, since the valuable product of manual training is a disciplined mind, while the valuable product of apprentice work is some article of commerce."

It must be admitted that, if too much emphasis is placed on the self-support idea, the danger hinted at in this criticism will become a reality. But the idea of self-support has not been upheld by the Zakir Husain Committee which is more concerned with the correlation of knowledge to the craft than with its mechanical development.

(v) *Subject-wise* vs. *craft-centred teaching*: Activity-centred or craft-centred teaching differs from the present-day class teaching in

175. K. G. Saiyidain: *One Step Forward*, p. 230.
176. M. K. Gandhi (quoted in C. J. Varkey) *The Wardha Scheme of Education*, p. 92.

certain important particulars. Children are taught things that come naturally before them as they work at their craft. There is no attempt at bringing in information unconnected with the aspects of the craft because a sense of completeness requires it. Instead of the logical order of topics, psychological order is followed because that is the only order that the child-mind will grasp. All useful knowledge comes at the proper time and there should be no attempt to bring it in somehow or other. The teacher should give only those bits of information that arise out of the occasion, irrespective of the subjects to which those bits belong. When the mind has assimilated these bits it will, of its own accord, synthesize it and arrange it into different branches of knowledge. The teaching, therefore, is not to be subject-wise, but centred round an activity. Craft or activity is the chief thing and the subjects act as the handmaid and enrich it. The illiterate but practical villager acquires his knowledge through his craft, can carry on his ordinary transactions in life, work out problems, can express himself clearly, can understand and grasp the arguments of others, can appreciate humour like a cultured man. His knowledge has been gained, not through separate study of different subjects, but through the occasions which offered themselves to him as he carried on his work in life. His knowledge does not exist in separate compartments but is one integrated whole, having grown out of and been related to his occupation in life. The craft- or activity-centred teaching, therefore, is in accord with psychological principles and with nature, and has the advantage of providing a natural motivation for learning.

(vi) *The place of play* In any natural method of education play must find a prominent place. The Zakir Husain Report sums up the position of play in the Wardha System as follows

> We have not given a separate and distinctive place to play in the scheme because it is essentially an extra-curricular activity ; if it is made a compulsory part of the syllabus, it loses its spontaneity and ceases to be play in the psychological sense. But in our syllabus, we have made provision for individual and group games, and we contemplate that in all good schools various kinds of games will be encouraged. It should, however, be borne in mind that in an activity school, play is an integral part of its method and is not included as an escape from academic drudgery.[177]

We should not assume more than this statement warrants. Play is only a *part* of the method. Perhaps the sphere of play is more retricted here than is the case in the Montessori Method. This is inevitable when we consider the emphasis placed in the Wardha System on *productive* activity. Since it is in the nature of the child to create things there need be no inherent contradiction between play and creative or productive activity. But when the attention of the teacher is fixed on the productive aspect of the method, the play aspect must necessarily suffer. There is also the anxiety on the part of the teacher to prevent wastage of material which must interfere with the free activity of the child. Moreover, what a child may please to do is narrowly limited by the prescription of a craft and its prescribed method. If play is the method by which the

177. *Basic National Education*, p. 58.

child seeks to find its individuality then such a restriction as is implied in the method does become a hindrance in the free development of the child's individuality. The play aspect of the method is not the most predominant, and this is to be expected in a scheme which has its roots in the desire to better the economic condition of the people and to turn education to useful and utilitarian purposes.

(vii) *Books as a handmaid of experience* "Give your scholar no verbal lessons: he should be taught by experience alone."[178] This extreme doctrine of Rousseau's naturalism serves the useful purpose of emphasizing experience as the natural method, but if the child were made to discard all books, the process of education would be very slow. In the present system books are used as a substitute for thinking on the part of the pupil and thus they hamper the natural growth of the child along the lines of discovery, investigation and scientific thinking. Books must be a handmaid of experience. The whole question has been ably dealt with by Kripalani in connection with the new method:

> The natural process of learning and development for humanity has, however, been slow and tortuous. Knowledge has been gained through trial and failure. Success has not been the rule but the exception. Shall the child in his education undergo the same slow tortuous process of trial and failure? Shall success come to him only as the final fruit of a series of failures? Can he thus learn such in the few years at his disposal before he enters life and chooses a trade or a profession? Is he not to take advantage of the accumulated experience and the wisdom of the ages? Nothing of this sort need however happen. He is not called upon by the new system to dispense with his books or his teachers. They are there to guide, regulate, facilitate and expedite his progress in the acquisition of knowledge. The advance need not be slow and tortuous. Rather by the new method the pace will be the quicker than at present. Every step that is taken will be correlated and co-ordinated with his personal experience, in the getting of which he is the chief and the principal agent. His knowledge will not be confined to results worked out by others. He will learn the processes by which information is gathered and knowledge acquired. Every step is consciously and deliberately taken for the end in view. The child is thus directed to discover for himself not only facts but the laws of investigation and thinking. He automatically acquires the habit of scientific thinking.[179]

In a large measure this place of the printed book is taken by the pupil's own work. He keeps a daily diary of the things he has discovered and learnt. Thus his dependence on the book or the knowledge of others is reduced, and he comes to depend on himself. The line of development of his knowledge will be his own depending upon how he has come by knowledge. No two schools or perhaps no two pupils will have the same diary. His diary or his book is made in the process of his acquisition of knowledge, and is a record of what he has discovered for himself or learnt. Certainly the teacher will use books for himself, but the pupil's book is his own diary or chart.

---

178. Rousseau: *Emile or Education*, p. 56.
179. J. B. Kripalani: *The Latest Fad*, pp. 18-19.

7. (a) *Humanism of the Gurukula System*: Philosophically, the Gurukula recognises that the spirit in the individual human being is a part or particle of the same eternal spirit which creates, preserves and destroys the phenomenal universe. An important part of the aim of education, therefore, should be to awaken in the individual a consciousness of being one with the Universal Spirit. But this permanent element in man, namely, *chaitanya*, lives in the transient element, namely, *jad*, so that the physical existence of an individual is the environment for the soul to live in. The material element in man thus assumes an importance as the abode and the instrument of the spirit, even though it may not be permanent. The education of the material in man, therefore, acquires a spiritual significance and must receive attention. " All that is comprised," says Aney, " in the term ' study of science, literature and arts ' comes within the sphere of the subjects of the education of the flesh of man. Here the educationist must carefully take note of the times and surroundings under which the human body has to grow and be useful.[180]

(ii) *The cultural aim*:—The curriculum of the Gurukula emphasizes the cultural aim. This is as it should be because the prime aim of the institution is to revive the ancient Vedic culture of India through a study of her Scriptures and Philosophies. The following general scheme of subjects for the Arts College and the Veda College of the Gurukula will illustrate the point: —

(1) Vedic Literature (Papers A and B for both the Colleges, Paper C only for the Veda College),
(2) Darshan (Eastern Philosophy),
(3) Sanskrit Literature,
(4) English Literature,
(5) Optional Subjects—
  (*a*) History, or
  (*b*) Western Philosophy, or
  (*c*) Economics, or
  (*d*) Chemistry,
(6) Arya Sidhanta (Comparative Study of Religions), and
(7) Arya Bhasha (Hindi) Literature.[181]

The first five subjects are common to both colleges. Subject No. 6 is taught in the Veda College alone and Subject No. 7 in the Arts College alone. The syllabus of the ten classes leading up to the College courses is also predominantly cultural. Sanskrit grammar, Sanskrit literature, and Hindi are compulsory in every class and receive a great deal of attention. Nature study, drawing, commerce and science are also included, but they do not predominate.

(iii) *The revival of Vedic culture and tradition*: The humanism of the Gurukula is in some respects akin to the humanistic movement

---

180. M. S. Aney: *Convocation Address at the Gurukula University*, 1941 (Hindi), pp. 8-9.
181. *The Prospectus of the Gurukula University*, 1944, pp. 13-14.

that spread over Europe in the fourteenth, fifteenth and sixteenth centuries. It aims at a revival of the ancient language and literature of India with the ideals and culture they embody, just as the European humanism was an attempt to hark back to the classical languages and literatures. It came as a revolt against the ravages that English education had wrought in the intellectual and cultural life of India. The aim of the Gurukula is to bring about " the cultural regeneration of India " and is " planned in accordance with Indian ideals and engaged in the solution of genuine cultural problems of India ".[182] Its main ambition is stated to be " to train the youths in the Vedic culture and Vedic traditions so as to make them worthy successors of the Great Aryans who once carried the flag of Vedic civilisation all over the world ".[183] The Prospectus of the Gurukula for 1927 states the aim thus " The Gurukula aims at turning out a body of students who approach Sanskrit Classics and the Vedas through the only right method of approach, namely, through the systematic and sympathetic study of the *Angas* and *Upangas* under right conditions, and who will, therefore, it is hoped, be able to throw open the treasures of ancient eternal truth—the Vedic ideal and ideals—to all mankind ".[184] It must be noted that the revolt was *not* against the English culture that might have been brought into the country through English education, for this was not the accomplishment of English education though it might have been its aim. The gulf [184] between the Indian and western culture was too wide to be bridged by an education of a very practical nature. The courses in English had been so sternly practical that as Mayhew remarks, " culture and humanities have been elbowed out ".[185] Through decades of neglect of the classical works of India, the Indian had lost hold of his own cultural heritage and had not been able to get a substitute in its place through his English education. The revolt of the Gurukula was thus not against English culture that was supposed to have come into the country, but against the lack of promotion of indigenous culture in schools and colleges. The task before it was to reinstate Indian culture in the educational scheme of the land.

(iv) *Evolution of a new Indian culture*: The humanism of the Gurukula, however, is not insular or merely a result of a patriotic sentiment. It grows out of the conviction that humanistic studies mould the thought and life of the students and become a part of their inner life. " Familiarity with Sanskrit," says Chamupati, " though it may at the outset appear of no great economic value, is an asset which one prizes more and more as one grows old. In the declining days of age the study

---

182. Chamupati: *The Gurukula University*, p. 6.
183. M. S. Aney: *op. cit.*, p. 13.
184. Pp. 40-41.
184. Arthur Mayhew: *The Education of India*, p. 153.
185. " It is when we take stock of India's moral and spiritual capital, her scheme of absolute values, her social and ethical traditions and ideas, with which her 'well-being', in its truest sense is associated, that we realise how essentially different it is from the corresponding world of absolute values which comprehends in a living unity the self-governing Dominions and the mother country " (Arthur Mayhew: *The Education of India*, p. 176).

of the Upanishads and the Vedas is every aged man's and woman's solace as it was the solace of the German philosopher who depended on it even for averting the agonies of death."[186] The Vedas, however, could not be understood so long as the vast literature comprising lofty systems of philosophy and metaphysics which the ancient sages had evolved with a view to aiding the interpretation of the Vedas was also not studied in the same spirit. The study of the Vedas in the right spirit involved the study of the Indian culture in its entirety, and the laying bare of the soul of India which had been overlaid with latter-day accretions. Thus the study of the ancient history of India in its economic, political, social and religious aspects became a prime necessity. The Vedic literature becomes the centre around which are gathered the various related subjects illuminating the Vedas, and in their turn being illuminated by them.

But Indian culture is only a part of the great commonwealth of cultures, and if the modern Indian student were confined to the ancient learning and literature of his own land, he would be only partially educated and would not fit into the modern conditions and ways of life. Therefore, it is considered important at the Gurukula to study western literature, philosophy and history in a comparative manner alongside of their counterparts in India. In doing this the Gurukula gives an important place to Indian studies, not for a patriotic reason, but because Indian thought and philosophy are more ancient than western and may be regarded as the ancestors of the thought and literature of the world. The aim of the Gurukula to bring the Indian and the western thought together is stated by the founder as follows :—

> The Gurukula is an educational institution founded with the avowed aim of reviving the ancient institution of *Brahmacharya* (continence), of rejuvenating and resuscitating ancient Indian philosophy and literature, conducting research into the antiquities of India, of building up a Hindu literature incorporating into itself all that is best and assimilable in Occidental thought, or producing preachers of the Vedic religion and good citizens possessed of a culture compounded of the loftiest elements of the two civilisations which have made their home in this ancient land of sages and seers, and of retaining in a permanent form for the use of humanity, the perennial features of the virile and vitalising civilisation of the ancient Aryans by moulding and shaping its institutions to suit the altered environments of the times.[187]

What is envisaged here is far more than a revival of Indian culture. The Gurukula student holds in his hands the keys of both ancient and modern cultures. He sticks to India's individuality as a guarded treasure, but does not shun the additions to it which modern science and culture offer to the heritage of the Past. So there takes place the inevitable interplay of cultures which is not only desirable but which is calculated to evolve a new Indian culture suited to our times.

This is a splendid broad-minded aim, but one may venture the opinion that in actuality it is not so broad. There is no doubt that the western thought and ideals do find a place in the curriculum and in the

186. Chamupati : *The Aryan Ideal of Education*, p. 12.
187. Quoted in Lajpat Rai : *The Arya Samaj*, pp. 194-5.

general management of the Gurukula, but "all quarters of the globe" are far from being drawn upon. No one in India today would be satisfied with a compound of the loftiest elements of the two civilisations only. Room must be made for the civilisations and cultures of the other lands also if a truly 'magnificent edifice' is to be erected. The Islamic culture came to India centuries ago and though it did not permeate the life of the people of this land in the way that the western culture has to some extent done, it is a living thing in the life of the community that professes the faith of Islam in this country. It certainly has elements in it which can be placed alongside of the loftiest elements of the two cultures mentioned and should be assimilated. Furthermore, Chinese culture must also find a place with its Buddhist background, more so, not only because Buddha was born and preached in India but also because, in recent years, China has come closer to India as a result of the Second World War. The affinities between the Chinese and the Indian outlooks are not to be overlooked. In the institution of the *China Bhavana*, the Viswa-Bharati has taken the lead in this matter. One wonders if the Gurukula will ever make room for these two cultures and some others as well. It is to be regretted that the sectarianism of the Gurukula prevents it from being broad-minded enough to make itself a real home of the study of the important cultures of the world, at any rate of the East. Even if the Gurukula has the duty laid upon it of training missionaries of the Vedic faith, it will certainly equip its missionaries all the better for their task if they are brought into contact with these cultures as well as the western culture as at present. One fervently hopes that this will be the line of the future development of the Gurukula.

(v) *Humanism and moulding of character*: Though humanism, as Adams points out, is "mainly concerned with knowledge", it cannot, as he admits, "be entirely dissociated from the modification of character",[188] since the process of acquisition of knowledge cannot but modify character to some extent. The Gurukula humanism is intended to produce a particular kind of character and the classical literature is used as a means of producing that character. In the words of the founder: "Our object was a school where strong religious character could be built up on the basis of pure Vedic instruction."[189] The Gurukula expects the student to exercise himself on the highest thought in philosophy, religion and literature and so develop and train his reason and intelligence, but it also goes beyond this in helping him to develop his will through self-discipline enabling him to exercise rational control over his animal impulses. Through and in all this training, a spiritual character is evolved.

(vi) *The liberation of the mind*: There are two senses in which the classical studies at the Gurukula serve to liberate the mind. In the first place, they are pursued against their sociological background, thus freeing the mind of the narrow literal interpretations which have been put

---

188. John Adams: *The Evolution of Educational Theory*, p. 229.
189. Quoted in Lajpat Rai: *The Arya Samaj*, p. 196.

upon them for centuries through ignorance. This service is of immense importance when it is remembered that the Brahmans alone held the key to the Sanskrit lore and were regarded as authoritative interpreters of it, though neither their training nor their outlook made them so. Also, the Vedas and the sacred books have for long been studied merely as the quarry from which religious injunctions were to be derived. The aim of the Gurukula in the study of these is not merely spiritual enlightenment but also a true understanding of the times and the people that gave them birth. There has always been the feeling that the western scholars and interpreters of the Indian culture have not been fair to the ancient classics and history of India because they could not possibly understand the Indian genius; it is the sons of the soil that can do this for obvious reasons. Thus the studies of the Sanskrit literature at the Gurukula serve to liberate the mind not only of the individual pupil but also of the nation from the bondage placed upon it by unintelligent tradition and blind belief.

In the second place, the Sanskrit studies had for years been an absorbing subject for European scholars, especially German scholars, Professor Max Muller being considered the greatest authority. This was helpful; but one unwholesome result of it was that the Indian scholars, awed by the western Oriental scholars, had lost their independence of thought and accepted all that came from the West without question: "Western Oriental scholarship has so completely enslaved the minds and enchained the intellects of our best men that on account of the many subtle factors that have entered into their intellectual and psychological upbuilding they cannot but regard as gospel truth whatever the *ipse dixit* of western savants."[190] It is against such intellectual domination of India by the West that the Gurukula stands, and tries to liberate the mind of the Indian from unwholesome scholastic bondage by encouraging original research and studies into the literature of his land.

(b) *Humanism of the Visva-Bharati System*: While Rabindranath Tagore did aim at spiritual culture in his school more or less in the fashion of the forest school of ancient India, he was also keenly alive to all that is most noble in the ideals that here and now make themselves felt in our modern society. This led him to the ideal of action or *creative activity*. Man does not realise himself only in thought but also in action. The universe receives its birth from the play of the creative joy of God. "The creation is the dance, *leela*, or the play of the Absolute."[191] The principle of action through which man realises himself has thus two aspects—creation and joy—which are inseparable. This gives us art which the ancient philosophic schools eschewed but which Tagore regards as of the very essence of God, and therefore, of man, and worth developing in every individual.

(ii) *Art fundamental to human life*: With Tagore, art is fundamental to human life. Feelings of pleasure and displeasure, fear, anger

---

190. *Ibid.*, pp. 37-38.
191. S. Radhakrishnan: *The Philosophy of Rabindranath Tagore*, p. 50.

and love are common to man and animal and it is necessary to give expression to these feelings. In animals the expressions of feelings go little beyond their bounds of usefulness, but in man while serving the same purpose of usefulness and having their " roots in their original purposes they have spread their branches far and wide in the infinite sky high above the soil ".[192] Beyond what is necessary for the purpose of self-preservation, man has an amount of emotional energy as a surplus which seeks an outlet in the creation of art, for man's civilisation is built upon his surplus. Far from wanting to suppress these legitimate feelings, Tagore would encourage or direct them in such a way as to result in creations of art, for such creations express our very being.

> This is the reason why of all creatures, only man knows himself, because his impulse comes back to him in its excess. He feels his personality more intensely than other creatures, because his power of feeling is more than can be exhausted by his objects. This efflux of the consciousness of his personality requires an outlet of expression. Therefore, in Art, man reveals himself and not his objects.[193]

(iii) *An aesthetic atmosphere* : In the full development of the personality of a child it is important that direction be given to this outlet of consciousness of his personality. With this end in view, Tagore provides an atmosphere in which man's artistic impulse may find not only no obstruction but positive encouragement. In Santiniketan, if there is the breath of culture, there is also the breath of art. Music and songs play the most important part. In the worship at the temple or at the time of prayer every morning in the open air, one hears music and songs that must give an impetus to whatever latent musical and poetic qualities one may have in him or her. Most of the *Gitanjali* songs of Tagore were written at Santiniketan. The poet tells us that, when fresh in their first bloom, they were sung to the boys who came in crowds to hear and learn them. The boys would then sing them in their leisure hours sitting in groups under the open sky on moonlit nights and in the shadows of the impending rain in July.

Drama, too, has a large share in the artistic atmosphere at Santiniketan. Tagore's later plays were written at Santiniketan and the boys would take part in the performance of those plays. The poet describes how those who witnessed the plays were struck by the wonderful power of the boy-actors even though they were never directly trained in the histrionic art and the plays were no mere school-boy dramas. The subtle understanding of the characters and the sympathy that the boys displayed did not come so much from instruction, as the poet had rarely allowed teachers to interfere with the boys' own interpretation of characters, but from their ability to enter instinctively into the spirit of the plays which they acted. It is obvious that this histrionic instinct, if it may be so called, is developed almost unconsciously in and by the atmosphere that the poet had consciously and purposely created for the boys to live in. The next step to acting is to write plays themselves and so continue the creative activity of acting into writing.

---

192. *Personality*, p. 148.
193. A. X. Soares : *Lectures and Addresses of Rabindranath Tagore*, p. 59.

The poet also tells us how he created a love for music in his boys by means of a proper atmosphere. When he first started his school he could see no evident love for music in the boys. He did want them to learn music, but he did not want to force it on them and so he did not engage a music teacher for them. But he created opportunities for those who had the gift for music to exercise it without any obvious pressure from outside. This had the effect of unconsciously training the ears of the boys for music and of whetting their desire to learn it. When gradually most of them showed a strong inclination and love for music, the poet saw that they would be willing to subject themselves to formal training, and it was then that he secured a music teacher for them.[194]

(iv) *The importance of art to man* The most important means by which man adds to his knowledge and enjoyment is language. It is the vehicle of literature, science and philosophy. As an instrument for receiving and transmitting messages of joy, however, language has its limitations and so it has to be aided or supplemented by the arts—of figuration, music and dance. Each of these has its own methods. If it is considered desirable for man to understand fully the outer world by means of the messages he can receive from it through his senses and sensibilities, and if his education is to be comprehensive and complete, it must include arts as well as literature, science and philosophy. Lack of cultivation of a sense of beauty deprives a man of a large source of emotional uplift and enjoyment and leads to an impairment of mental and even physical health.[195]

According to Tagore, where man's personality feels its wealth, it breaks out into display which is art.[196] Man lives in two worlds—finite and the infinite. On the finite side, we are one with the inanimate and the animal world where we exhaust ourselves at every step. On the other side, our aspiration, enjoyment and sacrifice are infinite. This infinite side reveals itself in symbols which have the elements of immortality. These symbols are the works of art and they build man's true world—the living world of truth and beauty. But this is not all. Man is and must be engaged in ever pushing further the frontiers of his true world of truth and beauty into the realm of the inane and the inert. Thus art signalises man's conquest of the world by its symbols of beauty springing up in places which were dark with ignorance and ugliness.[197]

(v) *Art and industry* : There are many who deplore the coming of machinery into India on the score that it has brought ugliness and has displaced Indian industries. The harmony between art and industry, between beauty and use, that was found in India in the pre-industrial era has been broken. It would be weak sentimentalism to recoil with aversion from machinery which has come to stay in India. While Tagore believes that industrialism must and should come to India, he thinks that

194. *Personality*, pp. 143 ff.
195. *Personality*, p. 30.
196. *Ibid.*, p. 31.
197. *Ibid.*, p. 29.

India need not pass through the evils of industrialism. He thinks that eastern thought can be reconciled with the mechanism of western civilisation. What we have to guard against is the temptation to divorce art from industry or religion :

> If the Indian view is adopted that all life, economic, intellectual and social, should reflect the spirit of religion, then art and industry will go together and India will not suffer from an amoral, artless industrialism. In ancient India what men made they made well without being conscious of it; for then they had the joy of labour of which art is the expression. Then the creative spirit or the desire for expression was satisfied in all work. Now they have lost the joy in life.[198]

Industry is only one of the fields of human activity where art needs to extend its frontier and make a conquest. In reality, it should extend itself in all other fields. Tagore has a tremendous faith in the transforming power of art in the world of today :

> This encroachment of man's personality has no limit and even the markets and factories of the present age, even the schools, where children of man are imprisoned, and jails, where are the criminals, will be mellowed with the touch of art, and lose their distinction of rigid discordance with life. For the one effort of man's personality is to transform everything with which he has any true concern into the human. And art is like the spread of vegetation, to show how far man has reclaimed the desert for his own.[199]

(vi) *The influence of art on human relationships*: Santiniketan came as a revolt against the machine spirit of the educational system which has made education " a mere mechanical contrivance to spread literacy or a commercial investment in the name of enlightenment ".[200] Tagore wanted to do away with the machine, to stimulate human interest and not to insist upon the clock-work precision of efficiency. " With that idea in view," says he, " I had made provision not only for academic courses of teaching, but also for other elements of culture : music and art and dancing, seasonal festivities and opportunities of helping the neighbouring villages." [201] Thus to Tagore's mind art of any kind has a humanising influence which is calculated to raise the level of human relationships.

(vii) *The fundamental unity of mankind*: Tagore believed that children should realise the fundamental unity not only of India, but of the whole world. He emphasized this all the more as he saw more of the world in his travels. He saw a unifying principle manifesting itself throughout the whole course of the history of India and working towards a definite synthesis. To his mind, the history of India is not the history of the Aryans or the non-Aryans ; nor is it a history of the Hindus or a history of only the Hindus and the Muslims taken together ; for of late the British had come and occupied a place of importance by providing the touch with the West which was essential for the attainment of her perfection. This synthesising principle, working as it were at the behest

---

198. S. Radhakrishnan : *The Philosophy of Rabindranath Tagore*, p. 215.
199. Rabindranath Tagore : *Personality*, p. 129.
200. *The Visva-Bharati Quarterly*, August 1938, p. 135.
201. *Loc Cit.*

of Providence, places on the Indians the responsibility of building up a greater India in which the Hindu and the Moslem and the Christian, the dark-skinned and the white-skinned, will all find their place.[202]

Tagore appealed to his students who came from different parts of the country, if they wanted their stay in Santiniketan to be fruitful and significant, to " make friends with strangers and offer your hearts to one another. You come here with the mission of realising the fundamental unity of humanity through co-operation and love." [203] He believed that the minds of the children of today are almost deliberately made incapable of understanding other people with different languages and customs than their own. The growing souls demand friendship and fellowship with all, not caring for barriers set by the sophisticated and prejudiced world—and in seeking these they grope after each other in darkness, and hurt each other in ignorance, and suffer from the worst form of blindness.[204] The poet tells his students how when he went to Sweden to receive the Nobel prize, the people there gave him a welcome fit only for victorious generals and beloved kings. He was told that the reason for such an outburst of hospitality was because they had realised that his love and mind were not limited to a particular race and time and that he belonged to all. " When I received human kindness," he said commenting on this fact, " from such strangers, I said to myself that I would throw open my doors to all, let my *asrama* become the guest-house of India, a centre of culture and of *maitri*. I cannot boast that I have completed my task, I can only say that I have tried my best." [205]

In the olden days, the natural geographical barriers kept the human races apart from one another, but with the advent of science these barriers were overcome and geographically speaking, human races have now come together as never before. However, just when the prospect was bright for humanity to come together into one human family and realise its fundamental unity, the human mind, so used to separation and division through centuries, set up other barriers, far more difficult of conquest than mere physical barriers. And so in place of the natural obstacles of the past we now have the artificial modes of exclusion separating one race from another—armaments, prohibitive tariffs and national politics and diplomacies. So in the face of geographical unity we have a moral disunity that is alarming. Tagore was keenly alive to the challenge of the situation so created when he wrote in 1920

> The mentality of the world has to be changed in order to meet the new environment of the modern age. To accept the truth of our own age it will be necessary to establish a new education on the basis, not of nationalism, but of a wider relationship of humanity.[206]

---

202. P. C. Mahalanobis: *The Growth of the Visva-Bharati*, 1901, 1921, Visva-Bharati Bulletin No. 9, p. 10.
203. *The Visva-Bharati Quarterly*, August 1938, p. 13.
204. *A Poet's School*, Visva-Bharati Bulletin No. 9, p. 13.
205. *The Visva-Bharati Quarterly*, August 1938, p. 135.
206. *Santiniketan and the Educational Institutions*, Visva-Bharati Bulletin No. 12, p. 23.

(viii) *The humanism of the Visva-Bharati*: The Visva-Bharati is an illustration of the "new education" that Tagore here speaks of. In his own words, "its aim lies in imparting life-breath to the complete man, who is intellectual as well as economic, bound by social bonds, but aspiring towards spiritual freedom and final perfections".[207] In this aim the humanistic emphasis on the powers of man who is reaching out for perfection through a cultivation of those powers is manifest. The two outstanding trends in Tagore's humanism, as we have seen, are (1) the emphasis on the creative activity of man displaying itself in works of art including music, dancing, painting, sculpture, poetry, drama and other forms of literature, and (2) the emphasis on the ideal that "mankind must realise a unity, wider in range, deeper in sentiment, stronger in power than ever before".[208]

In the furtherance of his first ideal he established in Santiniketan a centre of Indian culture where there would be gathered the best that the Indian creative faculty has produced and where an impetus could be given to creative minds for a free and unrestricted play of their talents and powers. In the various art institutes and cultural units, of which a brief notice was given earlier, he has tried to demonstrate his strong conviction that learning must be at the centre of all life, learning which imparts life-breath for the growth of the soul. He lays special emphasis on fine arts for he believes them to be the highest means of national self-expression. It is the fine arts, again, which express the complete personality of man:

> Our conscious mind occupies only a superficial layer of our life; the sub-conscious mind is almost fathomless in its depth—where the wisdom of countless ages grows up from its base, like the great continents, beyond our ken. Our conscious mind finds its expression in numerous deliberate activities, which pass and re-pass before our view. Our sub-conscious mind, where dwells our soul, must also have its adequate media of expression. These media are poetry and music and the arts; herein the complete personality of man finds its utterance.[209]

The aim is to develop the complete personality of man, including his conscious and subconscious self, so that in its expression and life, it may reach out to the best human perfection.

In the attempt of Tagore to realise the unity of man, one can see three strands woven together. The first is to give full expression to the creative aspect of the Indian mind, for he believes that "India has its own mind, which has deeply thought and felt and tried to solve according to its light the problems of existence".[210] He says:

> It is my hope that in this school a nucleus has been formed, round which an indigenous University of our own land has found its natural growth—a University which seeks to help India's mind to concentrate and to be fully conscious of itself; free to realise the truth and make this truth its own wherever found, to judge by

207. *An Eastern University*, Visva-Bharati Bulletin No. 7, p. 16.
208. *Ibid.*, p. 2.
209. *The Centre of Indian Culture*, pp. 42-43.
210. *Ibid.*, p. 1.

its own standard, give expression to its own creative genius, and offer its wisdom to the guests who come from other parts of the world.[211]

The second is the poet's desire "to extend by degrees the scope of this University on simple lines, until it comprehends the whole range of eastern cultures—the Aryan, Semitic, Mongolian and others—so that it would be able increasingly to reveal the eastern mind to the world". He believes it is time "for the East to collect its own scattered lamps and offer them to the enlightenment of the world".[212] And the third is for the East to appropriate discriminately, for her own enrichment, from the culture of Europe. In doing this, however, she must not "allow her priceless inheritance to crumble into dust, and trying to replace it clumsily with feeble imitations of the West, make herself, superfluous, cheap and ludicrous".[213] In other words, she must not lose her individuality. Visva-Bharati thus aims at being a centre of fine arts and humanistic studies which would reveal and promote the mind of India, and of the East, in close co-operation with the cultures of the West that must be studied if all humanity is to be regarded as one.

Viewed thus we see that the fundamental trends in Tagore's educational thought—the emphasis on the creative activity of man and the ideal of the realisation of the unity of man—are brought together in one institution and one programme. This Tagore believed was to be the great mission of Visva-Bharati as an educational institution. The first thing he did was to concentrate in this institution the different cultures of the East alongside of the culture of India, so that the varied ideals of art and civilisation which have been contributed to the world by the various countries of Asia might be studied and understood from the point of view of the unity of mankind. But Tagore was not content, as we have noted, with the cultures of the East only. He wanted to work toward the establishment of a living relationship between East and West, to promote inter-cultural and inter-racial amity and understanding, and fulfil the highest mission of the present age—the unification of mankind. In his own words "Visva-Bharati represents India where she has her wealth of mind which is for all. Visva-Bharati acknowledges India's obligation to offer to others the hospitality of her best culture and India's right to accept from others their best".[214]

Tagore's educational thought presents a most interesting development. From the ancient Indian ideal of a forest school to the modern ideal of a world school is the path to be covered not in a man's lifetime, but this is what Tagore has actually accomplished. While the forms of the two ideals might be different, the spirit is the same, and to a man of vision and initiative the progress from one to the other was both logical and possible. And so we have in the objects of the Visva-Bharati the highest humanistic thought of India in the realm of education ;

---

211. *An Eastern University*, Visva-Bharati Bulletin No. 7, p. 5.
212. *Loc. cit.*
213. *Loc. cit.*
214. *Santiniketan and the Educational Institutions*, Visva-Bharati Bulletin No. 12, p. 1.

To study the Mind of Man in its realisation of different aspects of truth from diverse points of view.

To bring into more intimate relation with one another, through patient study and research, the different cultures of the East on the basis of their underlying unity.

To approach the West from the standpoint of such a unity of the life and thought of Asia.

To seek to realise in a common fellowship of study the meeting of the East and the West, and thus ultimately to strengthen the fundamental conditions of world peace through the establishment of free communication of peace between the two hemispheres.

And with such ideals in view to provide at Santiniketan aforesaid a Centre of Culture where research into a study of the religion, literature, history, science and art of Hindu, Buddhist, Jain, Islamic, Sikh, Christian and other civilisations may be pursued along with the culture of the West, with that simplicity in externals which is necessary for true spiritual realisation in amity, good fellowship and co-operation between the thinkers and scholars of both Eastern and Western countries, free from all antagonisms of race, nationality, creed or caste, and in the name of the One Supreme Being. .[215]

And in these objects is the motto of the institution truly fulfilled, which is : *Yatra visvam bhavaty eka-nidam*, that is, " Where the whole world finds its shelter ".

(c) *Humanism of the Jamia Millia Islamia System* Philosophically Zakir Husain accepts the humanistic principle that man is made of spirit and matter. He gives the supreme place to spirit, though matter is a factor to be reckoned with. The duality of man's nature has an important bearing on his educational views. He says : " I believe education to be essentially an enterprise to help the divine in man. But I believe also that this enterprise cannot afford to ignore the animal in him. I believe that in virtue of the dual nature of its material, education has to take cognition of biological human individuality as well as of the absolute, objective, transcendental values." [216] The process of education would thus take hold of the animal part of man and harness it to the service of eternal absolute values, so that in the final product the spirit will predominate. Zakir Husain describes the process as follows :

I believe that education must respect individuality, help conflicting individual instincts and urges and motives to integrate into a coherent consistent pattern and thus assist individuality to grow into character. That done, I believe the final mission of education to be to harness this character into the service of the appropriate eternal and absolute values and thus transform it into a personality. From individuality through character to personality is the enchanting course of the great enterprise which is true education.[217]

The process thus leads from the dominance of matter or individuality to the dominance of spirit or personality. In Zakir Husain's thinking, the distinction between individuality and personality becomes the distinction between matter and spirit :

---

215. *Memorandum of Association, Statutes, Regulations and Rules*, Visva-Bharati Bulletin No. 5, p. 1.
216. Zakir Husain : *What I Believe*, a radio talk.
217. *Ibid.*

Individuality divides. It may be a necessary condition of physical existence; morally it becomes very often a shell within which we hide to escape the obligations imposed on us by our higher self. Then it stifles or distorts self-expression, encourages unwillingness to engage or co-operate in creative effort, and leads, in fact, to an abdication of man's social nature. Life cannot arise from a negation of the very basis of life. Personality emerges only when the fetters of individuality have been broken, when the human spirit has been released from the restraints of selfishness and the obsession of pettiness and fear.[218]

(ii) *Promotion of the Muslim pattern of life*: Personality necessarily has a social reference and implies development and growth in a social environment of a particular kind. The aim of the Jamia is a personality that has been nurtured and brought to maturity on a culture or a pattern of life which is distinctive of the believers in Islam. The promotion of a Muslim culture thus becomes its outstanding aim: "The highest aspiration of the Jamia is to evolve a pattern of life for the Indian Mussalmans which will have Islam as its focussing point and will be so designed as to harmonise our national culture with the universal culture of mankind." [219] The great national movement of India was from one point of view a conflict in the cultural sphere in which the Indians strove to preserve their own culture from the onslaught of western culture. In and within this movement there arose, on the part of the Muslims, a desire to preserve ever their own Muslim culture which they shared with the Muslim nations of the world. Between their own culture and that of the Hindus around them there was a wide gulf and they felt that their identity would be lost unless they revived and promoted their own distinctive culture. The Jamia is one aspect of such a revival. "Culture," says Zakir Husain, "is character. This character of a society is expressed in its forms and standards, its objectives and values; in the patient gathering of moral and material goods, in the accumulation of traditions and the formulation of common and ultimate ideals." [220] The aim of the Jamia is to focus in its life and teaching the Islamic standards and forms, values, traditions and ideals, so that they might begin to live again and help to revive a culture that was either being absorbed in the vastness and absorbing character of the Hindu culture or being imperceptibly lost through lack of contact with the Muslim nations of the world.

The Jamia is further justified on educational grounds. It was felt that the Muslim children studying in secular and non-Muslim schools were at a disadvantage inasmuch as, in those schools, they were not in their most natural cultural environment. The argument has been stated as follows:

Most educationists are agreed that true education can only be imparted through the medium of the traditional culture and the social environment of the educand. The Jamia Millia was instinctively groping for this principle when it called itself 'national'. It grasped it quite firmly by resolving that the mother-tongue of the

218. Zakir Husain: "Personality", *The Morning News*, Calcutta, Id Number, 1944.
219. Mohd. Mujeeb: *Jamia Millia Islamia*, p. 2.
220. Zakir Husain: *What is Culture*, a radio talk.

students should be the medium of instruction. And Gandhiji helped it to realise and assert its real nature when he insisted on more than one critical occasion that the Jamia Millia should be a distinctively Muslim institution in spirit as well as in name.[221]

The argument emphasizes the need of bringing up a child in the cultural environment in which he is born, which means that for the Muslim child, the proper environment is Muslim society and the proper cultural goods are the Muslim beliefs and traditions. Zakir Husain puts it in these words :

Education, in order to succeed, should bring the growing mind the food that it can assimilate and make its own. Now, the cultural goods of society, its art, its science, its technique, its institutions and customs, its religious practices and symbols, its great personalities, these are the food from which the growing mind can get its nourishment.[222]

The Jamia Millia was thus the result of a revivalist tendency which was gathering strength in the second decade of this century : " It was the embodiment of the natural desire of Indian Muslims to keep their education in their own hands entirely free from the alien influence which had sapped initiative and independence of character ",[223] and among its aims was " to broad-base the education of the youth on their own cultural heritage without rejecting what was true and useful in the culture of others ".[224]

(iii) *The cultural means of the Jamia* : With this ideal in view the Jamia aims at being an educational institution with an environment and atmosphere of Muslim traditions and values in religion, art, literature and form of social life. As in Santiniketan, so here a great deal of emphasis is placed on the influence of atmosphere from which the young mind imbibes, as it grows, the Muslim ideals and values. The atmosphere is helped by appropriate studies. Arabic, which stands in the place of Latin or Greek of the European renaissance, is compulsory and provides the fountain-head of all that is best in the old culture of Islam. The study of the *Quran*, which also is compulsory, besides giving the religious doctrine, imparts the basis of Muslim conduct. Added to this is the study of the tradition and of the social, political and religious history of the Muslim community through the centuries all over the world. The aim of all these studies is to surround the growing child with the cultural goods of the community, for in them is embodied what Ameer Ali has called the literary, scientific, rationalistic, and philosophic spirit of Islam.[225] The type of individual that is intended to produce is a Muslim nurtured in Islamic thought and tradition, who is conscious of a world-wide brotherhood of Muslims and their institutions to the extent that he would like them to be preserved for the good they do, and yet liberal enough to respect the culture and institutions of others, and patriotic enough to serve his motherland.

---

221. Mohd. Mujeeb : *Jamia Millia Islamia*, an unpublished article.
222. Zakir Husain : *What I Believe*, a radio talk.
223. Zakir Husain : *Jamia Silver Jubilee*, p. 1.
224. *Ibid.*, p. 2.
225. Ameer Ali : *The Spirit of Islam*, pp. 360-454.

(iv) *The revival of Muslim religious and social thought*: The cultural emphasis of the Jamia arises from the fact that if a cultural group is consciously to live a life of its own and live creatively, " the basic concepts that mould their life, the beliefs that unconsciously determine their conduct, the ordering of values that direct their judgment, the forces that shape individual personalities and find expression in social movements and aspirations " [226] must be kept alive and replenished continually. The Jamia regards this as one of its tasks for it recognises the fact that unless the life of the community was fed by the springs of life it would dry up. As Zakir Husain puts it :

> But if communities and nations lose contact with the mainspring of human activity the stream of corporate life dries up, concepts become mere words, forms are reduced to habits, men are turned to stone. The establishment of welfare institutions and the reform of externals is of no avail. The original sources of inspiration have to be tapped and a revivalism is impossible unless a group of men moved by the same spirit undertakes with courage and honesty to think out basic concepts afresh, to reinterpret ideals and apply them to the realities of life so that the springs of life burst forth again and transform the desert of aimless existence into green pastures and fertile fields.[227]

Zakir Husain points out that " Muslim life is today in need of such a revival ".[228] The political awakening in the country led the Muslims to become intensely conscious of their cultural identity, and it became necessary for them to answer questions that the awakened Muslims themselves were asking ; for instance : What ideology do the Muslims represent ? What, in Islam, is the nature of individual fulfilment, or the ideal social order ? How does Islam develop the personality ? How does it determine the character of economic organisation ? How would it regulate international relations ? What does it expect for humanity in the future ? What is the conception of the Ultimate end ? [229]

These questions gave rise to the need of a few at least of the earnest and sincere Muslims who, in addition to having mastered theological literature, were also fully conversant with the modern social sciences to be able to undertake an inquiry into these questions and share the results of their inquiry with the community. The need was fulfilled in the establishment of an Institute of Learning called the Baitul Hikmat which is a socio-theological research institute and is probably " the first stage in the revival of Muslim religious and social thought ".[230]

(v) *The Baitul Hikmat*: The Baitul Hikmat is intended to serve as a guiding light to the workers of the Jamia so that they may be able to " make their activities more fruitful and valuable for their community ".[231] It is to serve the purpose of supplying the motive force and the hidden springs of life to the Jamia :

---

226. Zakir Husain : *Baitul Nikmat*, p. 2.
227. *Ibid.*, p. 2.
228. *Ibid.*, p. 3.
229. *Ibid.*, pp. 3-4.
230. *Ibid.*, p. 4.
231. *Ibid.*, p. 5.

> The function of this Baitul Hikmat will be the definition and propagation of the Islamia view of individual and social life, the evaluation of modern theory and practice in political organisation, national economy, the art of living and culture, and the statement of the real Islamic viewpoint in relation to all these aspects of modern life. The Baitul Hikmat will determine the system of education most conducive to the healthy development of the Islamic society. It will edit the works of Muslim thinkers so as to enable those habituated to the modern treatment of social and religious subjects to derive full benefit from them, and one of its special objectives will be the editing and publication in Urdu of the works of Hakim-ul-Hind Shah Wali-ullah of Delhi. The Baitul Hikmat will also devote its attention to the study of the history and evolution of the *fiqh* and its comparison with western jurisprudence. It will prepare a graded course of studies to enable the youth to imbibe the basic teaching of Islam. It will, with this object, publish text-books and supplementary reading material, so that religion does not remain a general term for habits and empty forms but becomes a positive and creative aptitude of mind expressing itself in social action. The Baitul Hikmat will in short endeavour to become a means of creating and maintaining the true Islamic spirit.[232]

The above outlining of the function of Baitul Hikmat indicates what the Jamia is most concerned about, viz. the definition and propagation of the Islamic view of life. This view is not looked upon as a static, but as a dynamic view of life, intended to influence and guide the youth of Islam by making it a part of their life and thought.

(vi) *A synthesis of the old and the new* W. C. Smith in his sociological study, *Modern Islam in India* analyses three intellectual movements among modern Muslims. One was in favour of contemporary British culture headed by Sir Sayyid Ahmad Khan. The ideals and aims of this movement came to be embodied in the Aligarh Muslim University which set itself to impart western education through the medium of the English language, making Islamic studies an " extra " for what have been called " window-dressing " purposes. The second was in favour of a revival of the Islamic culture of the past without any adulteration with western thought and was headed by Ameer Ali, the well-known author of the *Spirit of Islam.* Its characteristic embodiment is in the Osmania University of Hyderabad (Deccan). The third was in favour of a new culture of the future and was led by Iqbal. Of this, the Jamia is a typical example. It aims at a synthesis of the old and the new trying to make Islam a dynamic force in modern times. The " old " is not in the form of taking old ideas bodily from the *Quran* and working them out in modern society, but in the sense that behind the forms of the *Quran* which, having relation to time and space, may be out of date, there is what has been called the eternal spirit of the *Quran* which is of value and which should be the life-giving essence of the institutions of these modern times. The " new " consists in the new methods revealed and established by the scientific spirit which should be used if the old has any chance of survival. The attempts may be characterised as the pouring of old wine in the new bottles.

The humanism of the Jamia is thus seen in two things: (1) the courses of study that comprise of the old learning imparted with due

---

232. *Ibid.*, pp. 5-6.

reference to the life and institutions of the time in which it grew up; and (2) the propagation of the Islamic spirit which is intended to be made the foundation of education. In other words, the humanism of the Jamia is a phase of the Muslim cultural revival carried out with the help and under the inspiration of the western methods and against a background of changing social and political conditions of the country. Its progress and success must mean a great deal to the "inner life" of the Muslims of India.

(d) *Humanism of the Wardha System* While the Zakir Husain Committee points out that it has "recommended the approach to education through crafts and productive work because that is a psychologically sound method of education" and that "there is no necessary logical connection between the scheme of basic education and either the industrial or the small-scale village economy", there is absolutely no doubt that the economic aspect of the scheme was very much in the mind of the prime mover of the scheme, Mahatma Gandhi. From his point of view, the scheme had value inasmuch as it embodied the principle of decentralisation of industry and agriculture which he regarded as a moral principle. J. B. Kripalani puts it very clearly when he states: "For Gandhiji, craft work is not merely a means of literary education; it is also an end in itself. Unless craft work is treated as an end in itself, it will lose progressively its economic value, efficiency, and significance."[233] The economic motive thus is not only not to be disregarded but is to be considered an important factor in the system.

One result of the stress on the economic aspect of the scheme has been the tendency to place man and his interests at the centre of things. All things are judged by reference to the welfare of the individual and society in the economic and social sense. It has even been said in connection with the work aspect of the scheme that "work is prayer".[234] The system is so realistic and naturalistic that anything beyond and above nature has been rigorously kept out, and attention and effort are focussed on the development of the individual's powers and the furtherance of the economic and social security of the individual and the group. It may even be said that while some of the principles underlying the system are moral or spiritual (for instance, the decentralisation of industry and agriculture and freedom from exploitation), the morality or spirituality of those principles is, strictly speaking, at the humanistic level. The scheme follows in this respect one of the articles of the pedagogic creed of John Dewey "The true centre of correlation on the school subjects is not science, nor literature, nor history, nor geography, but the child's own social activities."[235] The primary basis of education is thus "in the child's powers at work along the same general constructive lines as those which have brought civilisation into being".[236]

233. J. B. Kripalani: *The Latest Fad*, p. 65.
234. Rajendra Prasad in *Two Years of Work*, p. 33.
235. John Dewey: *Education Today*, p. 9.
236. *Ibid.*, p. 10.

(ii) *The circumstances leading to the humanistic view* : In his consideration of the social and ethical aspects of the scheme, J. B. Kripalani speaks approvingly of the humanistic trend in the western education brought about by the progress of natural and social sciences :

> The emphasis of natural science is on the individual. Social sciences, like economics and politics, stress the welfare of society. Both value education from the practical and utilitarian point of view. The spread of scientific, technical and commercial institutions is directly the result of the modern scientific and sociological spirit. It has come to be progressively recognised that the purpose of education is to fit the individual to take his rightful place in the economic, social and political life of the community. It is no more a preparation for the spiritual life, for the life hereafter. It is rather that the individual be trained to become an enlightened and useful citizen.[237]

The historical circumstances that have promoted this view in the West are : first, the spread of the spirit of democracy showing itself most effectively in a popular responsible government ; and second, the need for industrialisation and mechanisation for which intelligent and well-trained men are in demand. For the success of a democratic government it is necessary that all the citizens should be so trained as to be conscious of their social and political privileges and responsibilities and for the success of an industrialised economy it is necessary that the worker or the labourer should have his powers fully developed so as to be able to contribute, through the exercise of those powers, to his own and social welfare. The two aims, therefore, that come to loom large in the educational endeavour are to give training for citizenship and to produce efficient workers. These two aims are obviously humanistic and make man and his society the determinants of the type of education that should be given. The political, economic and social conditions that stressed these aims have, in recent years, repeated themselves to a greater or less extent in India. With the dawn of independence, the attention of all came to be focussed on the need for training in citizenship in a country which was so predominantly illiterate as India. And further, there was the need for determining an economy for the country in which there would be no exploitation of human labour. These two needs, as they faced the framers of the scheme, led them to place great emphasis on individual and social development and security. As a matter of fact the two needs are sought to be met through the craft-centred education as it gives training in both the spheres

> The society in school must be engaged in some fruitful creative activity. This is best supplied by the organisation of an art or a craft in the school. The value of creative labour as a principle of self-government can scarcely be exaggerated. Here self-government is neither imposed upon the pupils from above nor mimicked by them but grows out of their daily deeds and requirements. The labour and the craft principle therefore supplies the greatest impetus to democratic self-government in schools. It also provides opportunities for the cultivation of political and civic virtues under the expert leadership of the teacher.[238]

---

237. *The Latest Fad*, p. 57.
238. *Ibid.*, p. 60.

(iii) *Civic* vs. *religious character*: While Mahatma Gandhi was a believer in God and prayer, the scheme as it came to be worked out remained strictly at the humanistic level. This is most evident in the conception of morality that underlies the system. As Kripalani puts it: " Education from the earliest times has been conceived of in terms of character. Modern times lay greater emphasis upon the civic rather than the religious character. This has changed the complexion and colour of citizen morality." [239] In accordance with this view, the Wardha System tries to build up a civic morality inculcating the virtues of service, co-operation, equality and liberty. The social studies, for instance, have as their objective among others, " to develop a broad human interest in the progress of mankind ", " to inculcate the love of the motherland, reverence for its past, and a belief in its future destiny as the home of a united co-operative society based on love, truth and justice ", " to develop a sense of the rights and responsibilities of citizenship " and " to develop the individual and social virtues which make a man a reliable associate and trusted neighbour ".[240]

The civic character or morality does not receive its sanction from religion at all it is based on what the community or mankind has discovered to be the highest virtues in its commerce with life. Kripalani puts it very clearly when he says :

> The morality of today may not be based on religious dogmas, especially those of a revealed religion. It should be based on the enlightened experience of the race in many fields of activity. Today we may not mould our moral and embody them in institutions of a bygone age, historic and prehistoric. We may also not buttress this kind of morality by the idea of the fatherhood of God and his real or supposed commandments. We can only build morality on the actual fact of the brotherhood of man and his consequent equality and liberty. The general rule for the average man and woman today will not be 'the will of my father in heaven' but the golden rule of 'do unto others as you would be done by'.[241]

One wonders, however, as to how the conception of the brotherhood of men can be derived without the conception of a fatherhood of God, and whether the virtues that are intended to be developed—love, non-violence, truth—are after all not derived from what has been called revealed religion. The golden rule that Kripalani advocates is after all not the highest rule that mankind knows. There is a higher rule than that which comes from revealed religion and that the enlightened conscience of man would acknowledge as superior : " Love your enemies, bless them that curse you, do good to them that hate you, and pray for them which despitefully use you, and persecute you." [242]

(iv) *The cultural element in the system*: While the Wardha System is predominantly vocational, the cultural element in it cannot be disregarded, for it is peculiarly its own. It makes use of the traditional methods of cultural education wherever they can be used without

---

239. *Ibid.*, p. 58.
240. *Basic National Education*, p. 19.
241. J. B. Kripalani: *The Latest Fad*, pp. 60-61.
242. *St. Mathew*, Ch. V, 44.

prejudice to the main aim of the system. For instance, the Zakir Husain Report does emphasize the cultural value of the teaching of the mother-tongue :

> It is a means of introducing the child to the rich heritage of his people's ideas, emotions, and aspirations, and can, therefore, be made a valuable means of social education, whilst also instilling right ethical and moral values. Also, it is a natural outlet for the expression of the child's aesthetic sense and appreciation, and if the proper approach is adopted, the study of literature becomes a source of joy and creative appreciation.[243]

There is provision for music, the object of which is " to teach the pupils a number of beautiful songs and to cultivate in them a love for beautiful music ".[244]

The main cultural emphasis, however, consists in the fact that the entire system, based as it is on craft work, is a powerful means of art education. Dr. I. R. Khan puts the matter as follows :

> Art has a unique place all its own in the scheme of Basic Education. It is not 'art' in the narrow sense of the term. It includes both Fine and Applied forms. The processes of art education and craft education are not distinct from each other, but rather two aspects of the same educational process.[245]

Dr. Khan goes on to characterise the culture that would grow out of the scheme as the culture that grows out of life experiences and reflects the social ideals determined by the needs of the community at large. He says :

> 'Ideals grow out of the work and way of living—the capacity to make and fashion, to create and embellish, to discriminate and select the right type of things in harmony with one's surroundings, which our art course strives to engender among the pupils, will in the course of time lead to true cultural growth. It will give the individual an insight into the useful and beautiful in art and in life, emotional balance and imaginative understanding.[246]

There is, however, a broader basis of culture in the system than mere aesthetic training resulting from the teaching of literature, music or art. Culture is a matter of the spirit, a growing into fulness, or blossoming of the dormant capacities of the individual—his mind, his heart, his soul. The best in him is called forth only in an economic or social order in which he is left in full control of his work, to plan, organise, improve, invent and beautify. The Wardha System assumes an order in which the individual will have such freedom—an order in which, through decentralisation, the fullest scope will be given to the individual for the development of his powers. Through his craft or work he will learn precision, accuracy, perseverance, skill, thoroughness, a sense of proportion, beauty, order, and a knowledge of the physical world and of human affairs, culminating in independence of thought, feeling and action, and resourcefulness.[247] The type of culture that the scheme envisages is not

---

243. *Basic National Education*, p. 17.
244. *Ibid.*, p. 26.
245. I. R. Khan in *Two Years of Work*, p. 241.
246. *Ibid.*, p. 243.
247. Bharatan Kumarappa : *Capitalism, Socialism or Villagism ?*, p. 193.

superficial embellishment or so-called refinement that very often goes by the name of culture, but the culture or cultivation of the individual's innate powers. These are not fully developed in the centralised order for in such an order people's minds are regimented and their production and consumption standardised. They tend more and more to think alike, dress alike, and live and hate alike. Such regimentation cannot develop the individual's powers. " Only where a man's powers can have full scope for expression and development, as under the decentralised economy where he is in charge of his own work, can there be culture in the true sense of the word." [248]

8. (a) *Supernaturalism of the Gurukula System*: In its curriculum, routine and atmosphere the Gurukula is motivated and pervaded by a strong religious aim achieved with a missionary zeal and fervour. The vital relationship between education and religion is seen not merely in the various religious rites performed on special occasions in the life of the student, or in the religious activities that form a necessary part of the routine of school life, but in the belief that the development of intellect depends upon God for stimulus and help. The *Gayatri mantra* which the boys are asked to repeat at the Initiation ceremony affirms that the purpose of the prayer is that God may direct the intellect into virtues, good qualities and good deeds.[249] Similarly, the purpose of the worships, morning and evening, is " to remind the individual that his success in life and spiritual welfare alike depended on his energies running into line with the principles of the life universal ".[250]

In the Gurukula view, there are three kinds of ignorance, figuratively spoken of as nights, relative to nature, man and God. The ignorance about nature is dispelled by the study of such subjects as mathematics, geology, chemistry, botany and zoology. These enable the student to earn his living and qualify him for the profession of a Vaishya. The ignorance about man is removed by such studies as psychology, politics and history the study of which enables the student to fill an administrative position and be a ruler of men such as the ancient Kshatriyas were. But if a student is not content with this knowledge and is desirous to attain to that knowledge which is about God, then he studies the sacred scriptures and becomes an " aditya student ", or one who is as resplendent as the sun. The undertaking of the Acharya at the Initiation that he would make the pupil imbued with divine effulgence (*tejas*) is thus fulfilled. So long as the world has such men in it, spiritual darkness has no chance at all.[251] Knowledge is thus not regarded as the highest aim, but the means to a higher end, which is " the realisation of the universal principle (Brahman) in all acts, words and thoughts ".[252] The Gurukula aims at an all-sided development of the

248. *Loc. cit.*
249. See Dayananda, *Sanskar Vidhi* (Hindi), p. 91.
250. S. V. Venkateswara: *Indian Culture through the Ages*, p. 86.
251. The Thirty-eighth Annual Report of the Gurukula University (Hindi), pp. 8-9.
252. S. V. Venkateswara: *Op. cit.*, p. 86.

individual which, according to the ancient view, "cannot be complete unless he is prepared by the education he receives, not only for this life but also for a future existence".[253] Such was the Jewish education which aimed at preparing the man for eternity and the medieval European education which laid stress on the preparation for the world to come. To this end, therefore, the Gurukula makes the study of the Vedas an essential part of its programme in the school and the college.

The three elements of supernatural life receive the greatest emphasis in the life and programme of the Gurukula. They are Faith, Worship, and Works. Let us consider them one by one.

(i) *The element of faith* As an educational agency of the Arya Samaj, founded by Swami Dayananda, the Gurukula holds the doctrines of the Vedic religion as conceived by the Swami and formulated by the Samaj as a creed in 1877. They are known as the Ten Principles and are regarded to "constitute the only authoritative exposition of its beliefs and its doctrines".[254] The first two principles relate to the conception of God, the third to the nature of the Vedas and the rest to individual and social conduct. The conception of God is expressed as follows :

> God is the primary cause of all true knowledge and of everything known by its means.
>
> God is All-truth, All-knowledge, All-beautitude, Incorporeal, Almighty, Just, Merciful, Unbegotten, Infinite, Unchangeable, Without a beginning, Incomparable, the Support and the Lord of All, All-pervading, Omniscient, Imperishable, Immortal, Exempt from fear, Eternal, Holy and the Cause of the Universe. *To Him alone* worship is due.[255]

If God is All-knowledge and All-truth and is the primary cause of all true knowledge, belief in and worship of Him must hold the central place in a place of learning. Knowledge and truth are held to proceed from God, and the vehicle used is the Vedas

> The Vedas are the Books of true knowledge, and it is the paramount duty of every Arya to read or hear them read, to teach and read them to others.[256]

Thus, next to the belief in and worship of God, the study of the Vedas must be considered a matter of primary importance. If one was to acquire a true belief in God and was to worship Him as he must, he should know the Vedas.

Spiritualising secular subjects : Lest it be thought that so great an emphasis on the study of the Vedas naturally tends to exclude other studies of the non-spiritual type, it needs to be pointed out that Dayananda did not think it so. He seems to spiritualise non-spiritual subjects by suggesting that studying them is a part of one's sacred duty, and all true knowledge as it comes from God must partake of the nature of sacredness. The whole view is stated by Chamupati as follows :

---

253. S. K. Das : *The Educational System of the Ancient Hindus*, p. 19.
254. Lajpat Rai : *The Arya Samaj*, p. 101.
255. *Ibid.*, pp. 101-2.
256. *Ibid.*, p. 102.

> If a complete course of Vedic training could be imparted nowadays as it was in the days of yore, then of course there would be no need of any other study. For, strange as it may seem to you, we append all sorts of science to the Vedas as their *Angas* and *Upangas*. The study of the Vedas is not complete unless it includes in it the study of both philosophy and science. While other religions have always fought shy of science, under the Vedic system science has been made a subsidiary branch of religion itself. That is why there have been no martyrs to Science in what they call "religion-ridden" India.[257]

This attitude is reflected in the Gurukula scheme of studies which while giving an all-important place to the study of the scriptures provides a place for modern subjects such as economics, politics, history, philosophy and chemistry.

The Vedas as a determinant of right conduct: The study of the Vedas is not enjoined merely for the sake of study, but because it helps in determining right conduct: "Those who are desirous of knowing righteousness should ascertain it from the Vedas. What is righteous and what is not cannot be rightly determined without the help of the Vedas."[258] If this is the importance of the Vedas for human conduct, their study should be for everybody and not for a particular sect or sects, since righteousness and good conduct are not only desired but expected of all men alike: "It is the special duty of the King that he should educate other *Kshatriyas, Vaishyas* and good *Shudras*. If only *Brahmans* get education and Kshatriyas and others are debarred from it, then knowledge, righteousness, kingdom and prosperity cannot be increased."[259] Here Dayananda shows a democratic tendency, though in a restricted form, which was absent from ancient education. He is very emphatic in saying that "Females and males have a right to be educated —all men without distinction".[260] He goes on to argue:

> It means that all persons should read and hear the Vedas, increase their knowledge, accept good things, quit bad habits, and be happy. Does not God want to do good to the Shudras? Is God so partial that he permits the reading of the Vedas only to the twice-born and not to the Shudras? Had God designed to prohibit teaching in the case of the Shudras, he should not have endowed them with tongue and ears. Just as God has made the earth, water, fire, air, the moon, the sun, corn and other objects for all, similarly he has revealed the Vedas, too, for all.[261]

The Vedas as the fountainhead of all knowledge: The courses of study that Dayananda lays down point to the belief that all studies should culminate in the study of the Vedas which are the fountainhead of all true knowledge. He suggested that the beginning should be made with the teaching of pronunciation and grammar of Sanskrit leading on to the principles of prosody. This is by way of preparation for the study of the scriptures which are all in Sanskrit. Thus Sanskrit is to be taught right from the first class. The Indians are believers in the direct method

257. Chamupati: *The Aryan Ideal of Education*, p. 6.
258. Dayananda: *Satyartha Prakasha*, p. 79.
259. *Ibid.*, pp. 79-80.
260. *Ibid.*, p. 110.
261. *Ibid.*, pp. 110-111.

and "the method of teaching by translations was laughed at in India"[262] even in ancient times. Moreover, Sanskrit is looked upon as a universal language, which "belongs to no country" and "is the source of all languages".[263] "After this should be taught the *Manusmriti*, the *Ramayana* of Valmiki, the *Mahabharata* upto the *Udyoga* chapter, the *Vidura-Niti* and other beautiful pieces, so that good manners may be acquired and evil habits avoided."[264] After spending one year on the study of these books may be taken up the teaching of the six books of philosophy—Purva Mimansa, Vaishesika, Nyaya, Yoga, Samkhya and Vedanta—with commentaries of the sages and other good authors. But the study of the Vedanta should be preceded by the ten Upanishads—Isha, Kena, Katha, Prashna, Mundaka, Mandukya, Aitareya, Taittiriya, Chhandayoga and Brahad-aranyaka. It is estimated that the six books of philosophy with commentaries can be studied in two years. Then may be taken up the four Vedas with their four Brahmanas—Aitareya, Satpatha, Sama, and Gopatha—with their proper accents, meanings and explanations. Dayananda lays down emphatically that the Vedas should be taught with meaning and not without meaning.[265] After having thus studied the four main Vedas, the other Vedas—Ayurveda, Dhanurveda, Gandharva-veda, and Artha-veda—may be studied. These four Vedas are respectively sciences of medicine, of government, of music and of economics comprising industry and commerce. Then come the studies of astronomy, mathematics, astrology, etc. The Vedas thus are the foundation of all other learning. The text of the truth and propriety of other subjects is provided by the Vedas for "the acceptance of the true scriptures such as the Vedas covers the whole truth".[266]

The doctrinal instruction at the Gurukula: In general the syllabus of religious instruction at the Gurukula is spread over the ten school classes and the four college classes on the following lines In the first five classes which form the primary section, the children are made to memorise the *mantras* or verses of the *Sandhya, Homa* and the prayers with emphasis on correct pronunciation. These are used daily in their morning and evening religious exercises. They are also taught lessons from the text-books of religious instruction. In the middle section, comprising sixth, seventh and eighth classes, they are taught the *mantras* with meaning relating to the *sandhya, homa* and other religious exercises together with portions of scriptures on *Brahmacharya* and the rules of *Yama*. In the high school section comprising ninth and tenth classes an intensive study is made of Swami Dayananda's *Satyartha Prakasha* and the *Bhagvad Gita*, including memorisation of sixty verses in each year

262. S. V. Venkateswara: *Indian Culture through the Ages*, p. 146.
263. Dayananda, *op. cit.*, p. 283.
264. *Ibid.*, p. 102.
265. He emphasizes this point because during his days it was the practice to cram and recite Vedic mantras without understanding their meanings. This leads to the wrong conception that the value of the mantras lies not in their sense, but in the order in which the sounds have been arranged. Thus the mantras dwindle into mystic formulas and are not regarded as having relation to practical aspects of life.
266. Dayananda: *Satyartha Prakasha*, p. 107.

from the *Gita*. The Vedas proper are studied in the four college classes. To this formal course of instruction may be added the talks given by the Acharya every morning to the school assembly on moral and religious subjects. This doctrinaire teaching is powerfully stimulated and helped by the simultaneous study of the Sanskrit sacred literature during the entire period of a student's stay in the Gurukula. So that as Myron Phelps has remarked : "The atmosphere of the Gurukula may be said to be saturated with the Vedas and Upanishads." [267]

The whole aim of the religious curriculum and instruction in the Gurukula is thus to build a faith in God in accordance with the tradition that has come down from the Vedic times. The emphasis, however, is not on the dogma as such, but on the rule of life that such faith enjoins on the believer, and that becomes a part of his life through an intensive study of the scriptures and a discipline of life extended over a period of fourteen formative years of life. The study of the Vedas and the other *shastras* is the mainspring of the religious life of the school for without it religious life cannot be intelligently lived. The last of the three cardinal injunctions of the Upanishads, namely, "Study the Vedas", helps the living of the other two, namely, "Speak the Truth" and "Follow Religion".

(ii) *The element of worship*: There is a great deal of the element of worship, ritual and ceremonies in the Gurukula scheme. This is a natural corollary of the belief already mentioned, namely, that the development of intellect depends upon God for stimulus and direction.

Dayananda believed that the upbringing of the child begins not only at his birth but at his very conception and that the character of the mother influences the character of the child in the womb. In view of this belief, Swami Dayananda has, following the ancients, prescribed, as one of the sixteen ceremonies to be gone through on various occasions in life, the *ceremony of conception* which the husband and wife perform before the conception. The child-to-be is thus entrusted to the care of the gods even before it has begun its existence. Then there is a *ceremony at the birth* in which, after the new-born babe has been bathed with pure and scented water, the *homa* ceremony is performed with clarified butter and scents. The next important ceremony is the *Upanayana ceremony* or Initiation. It signalises the entry of the boy into the family of his preceptor (*guru-kula*) leaving the family of his father. To all intents and purposes he is a member of the teacher's family. It is his second or spiritual birth. The Initiation Ceremony at the Hardwar Gurukula is not exactly the same as it was in the Vedic times, but in spirit and significance there is no variation, and it serves to emphasize one of the fundamental principles of the Gurukula system, namely, that as soon as the child steps into the temple of learning he surrenders himself, body, mind and soul to the care of the teacher who takes the place of his father. Another ceremony, similar to Initiation, is that of *Vedarambh* which initiates the student to the study of the

267. Quoted in Lajpat Rai: *The Arya Samaj*, p. 202.

Vedas. Admission to the Gurukula is open to only those in respect of whom this ceremony has been performed. The study of the Vedas intended here begins with the learning of *Gayatri mantra* and includes the Angas, Upangas, Upvedas, Brahmanas, and the Veda proper. The ceremony is pre-eminently illustrative of the belief that supernatural help is essential to a successful pursuit of Vedic studies and other studies as well. The third and the last ceremony of a *brahmachari* life is the *Dikshant* Ceremony or the Convocation at which diplomas and degrees are awarded to the students. Throughout the stay of the *brahmachari* at the Gurukula his study and life are permeated by religious influences mainly engendered by the study of the Vedas and the rights and rituals. As he goes out and enters the life of the world, he is enjoined to look upon all his doings from the religious point of view and as duties laid upon him by God. That is the purport of the practical precepts that the Acharya preaches at the *Dikshani* ceremony and that are taken from the *Taittiriya Upanishad*.[268]

Over and above these occasional ceremonies, the daily routine of the Gurukula includes two acts of worship, performed morning and evening. These are the *Sandhya* which is a prayer silently and individually offered, and the *Agnihotra*, which is a fire oblation made by the boys in groups. The *Sandhya* is the mental repetition and meditation, with closed eyes, of a number of Sanskrit verses from the Vedas. The *Agnihotra* or *homa* is performed in a group under the guidance of a leader. Twigs or finely split wood are placed in the brazier and clarified butter poured over it and ignited. The fire is maintained by continual libations and additions of fuel, and at intervals sugar and fragrant herbs and spices are thrown into the flames.

There are three purposes underlying all these worships and religious exercises. The first is to impress upon the student the great truth that all knowledge is from above—a fundamental principle of the Aryan faith. Knowledge of the highest kind is revealed to man by the Supreme Being. The finite minds of men are not capable of apprehending the whole Truth regarding God, man and nature. Objective sciences are not adequate; there is something beyond and above their methods needed to explain the great riddle of the universe. The "strange footprint on the shores of the unknown" cannot be explained except with divine illumination and assistance. This cardinal doctrine of supernaturalism is held before the student day in and day out so that not only in the field of knowledge but also in other fields of human activity, he may give Him the pre-eminence in order to ensure righteousness of conduct on his part and success in life.

Another purpose is to establish a habit of righteousness even if intellectual conviction is wanting, at any rate for the time being. Not all our actions are motivated by rational understanding of their rightness: a good many of them are merely habits, so that the essayist who said that man is an irrational animal is profoundly right. If righteousness

268. 1.11.1-4.

is desirable, it should be made a habit so that it becomes second nature. Routine is of great value, and children rather like it, for routine tends to make a way of life permanent once it has been established. We enforce courtesy on the part of children in the home. They may not, and do not, know the pros and cons of being courteous, but they adopt courtesy as the desire of the elders and in course of time learn its social and religious significance.

The third purpose is to influence the sub-conscious region of the child's mind in favour of religious and spiritual attitudes. The constant repetition of religious formulas over the long period of fourteen or more years deposits on the sub-conscious mind a stratum of fertile matter from which will spring his future actions. Knowing that so much of life's activity is governed by the sub-conscious make-up of the individual, it seems of the utmost importance to mould it in the ways of the spirit, if spiritual and religious character and attitudes are to be ensured.

(iii) *The element of works*: The third element of supernatural life, namely works, partakes of the nature of asceticism in a great measure. The student is called a *Brahmachari* and is expected to practise *brahmacharya* or continence, which is calculated to inculcate the qualities of endurance and hardihood. The predominant idea is of *Tapas* or austerity which comes down from the ancient ideal of education and life. In fact, the conception of austerity as a fundamental principle of life runs through the system as a whole.

" *Brahmacharya and asceticism* At the Gurukula the student is called a *brahmachari*, that is, one who practises *brahmacharya*. The word is an ancient one and is rich in associations. The essence of *brahmacharya* is continence or concentration and accumulation of energy through a code of discipline and self-restraint. The most difficult aspect of this was as regards sexual life. The student as a rule was not to look at dancing and visit festivals or places where men assembled for gambling or gossip. He was not to gaze at or touch women. He was not to be fastidious about bodily purity and comforts lest that should awaken in him sexual passion. He was to regard with a brotherly eye the maidens of the neighbourhood who bestowed alms to him and the Guru's wife as a mother. It was thought that the sexual inclinations could be counteracted by giving the mind absorbing work and the body plenty of exercise in the open air. Darkness, closed room, comfortable beds and belongings were to be avoided as they gave rise to sexual ideas. Sandal, perfumes, flowers, beds, music, etc. which make a sensuous appeal to the mind were specially to be avoided. We are told that there was a special ceremony at the sixteenth year called *Godana* which marked the dawn of adolescence. It took account of the gathering strength of the sex instinct and sought to counteract its urge by adding new rules of conduct: " forbidding luxurious baths, meticulous cleaning of the limbs, combing the head, using perfumes and ointments, sleeping on high beds,

singing, dancing and self-abuse. The student was to avoid the razor, and remained unshaved the whole year "[269]

Even the *influence of food* was given due consideration and the different foodstuffs were classified as *Satvika, rajasika* and *tamasika.* The first kind of foodstuffs were those which were juicy, substantial, congenial and comforting and the students were to take these and eschew the last two kinds. The *rajasika* foods were calculated to stir up activity and pursuit of bodily pleasure and the *tamasika* induced sleep and indolescence. However, Manu and the law-givers allowed " the student to eat *ad libitum* and cut down the rations only after student-life ".[270] This liberal attitude apparently grew out of the conviction that restriction on food was not in the interests of the physically growing child or youth as it made for general physical weakness and retarded growth. It was recognised that, after all, discipline had more to do with the control of the mind in withdrawing it from sensual objects rather than a checking of the senses. Gluttony, of course, was forbidden, not so much on account of the effect of foodstuffs on the student, but because it stood in the way of success in the practice of the *Yoga* or control of mind. Of course, both the disciplines were necessary—that of the senses and that of the mind—and the first was calculated to help the latter. In all this we have an indication of the ancients realising the unity of body and mind as one organism such as the modern psychologists have proved. The mind is to be helped by the body and the latter is to be subjected to a rigorous discipline so that the mind might reach the full measure of its stature.

The spiritual value of daily routine The daily routine which was rigorous in kind was imposed with a view to spiritual progress. The students were required to get up in the small hours of morning and chant the sacred texts in concert. Then they attended to ablution which was followed by cold bath which " toned up the brain and cooled the eye, and kept the hair from turning pre-maturely grey ".[271] The hot climate of the country made frequent bathing necessary, and the student bathed at least once a day, and often three times a day. All these acts, however, were not to be gone through for the sake of their immediate effect or utility but for the sake of the spiritual effect this produced on the student :

> The Aryan sages were training the young man to look at the ordinary acts of life from the sublimest point of view. He might bathe in a mountain ravine, but he saw in it the mighty Ganges or the winding Yamuna, or even the confluence of the seven streams familiar to him from the Vedic age onwards. The waters that washed him reminded him of the vast ocean and of the herbs which grew near the milky brine when the Moon shed her silver radiance on it and cured many a benumbed limb and aching heart. Everywhere he learnt to identify his interests with those of Nature's eternal forces.[272]

---

269. S. V. Venkateswara : *Indian Culture through the Ages*, p. 125.
270. S. V. Venkateswara : *op. cit.*, p. 140.
271. S. V. Venkateswara : *op. cit.*, p. 141.
272. *Ibid.*, p. 142.

A practical reason for a life of hardihood and endurance such as the Gurukula enjoins is that such a life prepares the student for even the worst kind of future :

Children should be able to stand the prospective hardships of life, and where will they receive training for it if not in the school ? School is the training ground where children can develop virtues which will stand them in good stead when the trials of life come. If they do not come, so much the better, but if they do come they will not be taken unawares. If our young man cannot cope with the varying situations of life our educational system is to blame. We should so train him as to equip him for the worst in life so that it would be smooth sailing when he enters life, the worst of which he has already anticipated and the best of which he will heartily enjoy. A *Brahmachari* in the Gurukula is a soldier in the making. He sleeps on a hard bed, takes a coarse meal, braves the oddities of weather, lives on the bare necessities of life, eschews all temptations—and all this helps him in presenting himself as the most serviceable and self-sufficient unit in the social organism.[273]

In the adaptation of ancient ideals and theories to modern conditions, some measure of allowance has to be made for the changed circumstances while retaining their spirit and main features "I admit that a system so old cannot be reproduced in its entirety in the twentieth century, but, then, Gurukula is not such a rigid system ; it is the spirit, and, remember, spirit is eternal." [274] The idea of austerity, for instance, cannot be worked out as in those bygone days, but the spirit of austerity can be introduced in student life even now. The Gurukula has succeeded remarkably in doing this. In the first place, it is situated away from the busy world providing the necessary condition of seclusion from city life. "The seclusion is at the same time physical, mental and moral." [275] Not only does the seclusion protect the boys from moral contamination, but it serves the useful purpose of reducing to a minimum the temptations and attractions of a world steeped in luxury so that the task of inculcating the ideal of simplicity and austerity may be made easier. The contact with the outer world is reduced as much as possible. The boys are not allowed to go home even in the long vacation (except the College students who are allowed at the discretion of the Acharya) the rule being

No Vidyarthi of the Gurukula shall be allowed leave of absence from the Gurukula except under special circumstances, such as his own serious illness or the serious illness or death of his guardian or some other near relative. Such leave will be granted by the Governor for a period not exceeding fourteen days in case of the serious illness or the death of the guardian or near relative and six months in the case of the Brahmachari's personal illness or some other important work.[276]

There are restrictions upon the *Brahmacharis* seeking the guardians or corresponding with them during the period they are in school : "No one except the guardian or the person authorised by him shall be permitted to meet any student of the Gurukula. In special cases the Governor may use his own discretion. Ordinarily such meeting cannot

---

273. Satyavrata : *Fundamental Principles of the Gurukula System*, p. 6.
274. *Ibid.*, p. 8.
275. Chamupati : *The Aryan Ideals of Education*, p. 5.
276. *Admission Rules of the Gurukula University*, p. 9.

take place more than once a month." [277] Again, "The students of the first eight classes shall not correspond with their guardians. The students of the higher classes may correspond but only once a month. This correspondence shall take place through the Acharya." [278]

Boys are admitted at the age of about eight, none being admitted who is over ten. The guardians have to give an undertaking that their wards will remain at the Gurukula for at least sixteen years, i.e. until they are twenty-four. The boys take a vow of poverty, chastity and obedience for this period and the vow is renewed at the end of the tenth year.[279] The undertaking given by the guardian or parent commits him to keeping the boy at the Gurukula for sixteen years and delegates all his powers as guardian to the authorities of the Gurukula. He also agrees

(1) That if before the completion of the twenty-four year of his age, the said brahmachari is betrothed or married, the Gurukula authorities will expel him from the institution, and

(2) In case the marriage is solemnized after the completion of his studies, but before the attainment of the age of twenty-four, the Brahmachari will be liable to the forfeiture of all diplomas or certificates granted to him by the Gurukula.[280]

The school routine is of a full and strenuous type, beginning at 4 a.m. (5 a.m. for the youngest boys) and finishing at 9 p.m. (10 p.m. for the oldest boys), keeping the boys engaged in study and play and under the constant supervision of the teachers. The uniform is of coarse cloth, mostly Khaddar, and of the simplest design, and the footwear is sandals which are used sparingly. The beds are wooden platforms and other furniture is of the simplest kind. There is a great deal that the student has to do in the way of cleaning his room and its surroundings. The two hostels which are called *Brahmachari Ashrama* are simple buildings monastic in construction. Inside is a quadrangle developed as a garden by the manual labour of the students themselves. One is struck with the austere simplicity of these student dwellings and the manner of life lived there. The food is plain though substantial consisting of wheat *chapathis, dal,* a vegetable and curd. In the case of the younger boys the teachers live with them in the dormitories so that there is a continual supervision of their conduct and guidance in their problems. The College students do not share their rooms with the teachers and are themselves responsible for the observance of rules. They have to keep diaries in which they record daily the time devoted by them to the study of each subject and the performance of religious duties. It was mainly this ascetic aspect of life in the Gurukula which led Sydney Webb to characterise the institution as "perhaps the most fascinating educational experiment in the whole world" and as "a new type of monasticism".[281]

---

277. *Ibid.*, p. 10.
278. *Loc. cit.*
279. Lajpat Rai: *The Arya Samaj*, p. 198.
280. *Admission Rules of the Gurukula University*, p. 12.
281. Lajpat Rai *The Arya Samaj*, p. xv.

(b) *Supernaturalism of the Visva-Bharati System*: The God-conscious man of the Upanishads had a deep feeling of adoration for the universe, because he believed in the immanence of the infinite in nature. His object of worship was present everywhere in it. It is the one living truth that makes all realities true. This truth is not only of knowledge, but of devotion.[282] Thus to Tagore's mind knowledge and devotion—intellectual and the spiritual—are but two aspects of the attainment of truth. An institution of learning must, therefore, provide opportunities for both these aspects to be realised so that " teaching should be a part of a worshipful life " The *asrama* has a temple built by Tagore's father, where formal worship takes place, but far more important than that is the temple of nature symbolised in its *amalaki* groves and stately *sal* trees among which is performed the worship of life daily lived in the presence of the eternal. " According to him, the best way to derive divine inspiration is to lose oneself in the contemplation of nature. In silence and in solitude we have to enjoy the presence of the divine in nature." [283]

(ii) *Formal religious instruction* Such being Tagore's views on the nature of religion, it is not surprising that there is very little formal religion in Santiniketan. Tagore does not believe in religious instruction as it is given in sectarian schools. He believes that religious feeling and piety will work their way into the life of the students, if the environment is pure and noble. " Experience of the spiritual world, whose reality we miss by our incessant habit of ignoring it from childhood, has to be gained by children by fully living in it and not through the medium of theological instruction." [284] As a matter of fact, definite theological or religious instruction is fraught with danger : " From my experience I know that where the eagnerness to teach others is too strong, especially in the matter of spiritual life, the result becomes meagre and mixed with untruth." [285] In this matter gaining and giving are the same thing " as in a lamp to light itself is the same as to impart light to others ".[286] He thus draws a distinction between the subject of religion and other subjects in the school curriculum. Religion cannot be taught in the form of graded lessons, it is caught by living a life in a spiritual environment :

> Religion is not a practical thing that can be doled out in fixed weekly or daily measures as are among various subjects in the school syllabus. It is the truth of our complete being, the consciousness of our personal relationship with the infinite ; it is the true centre of gravity of our life. This we can attain during our childhood by daily living in a place where the truth of the spiritual world is not obscured by a crowd of necessities assuming artificial importance ; where life is simple surrounded by fulness of leisure, by ample space and pure air and profound peace of nature ; and where men live with a perfect faith in the eternal life before them.[287]

---

282. *Sadhana*, p. 17.
283. S. Radhakrishnan : *The Philosophy of Rabindranath Tagore*, p. 21.
284. *Personality*, p. 127.
285. *Ibid.*, p. 135.
286. *Loc. cit.*
287. *Loc. cit.*

Thus Tagore relies almost completely on the *genius-loci* of the place of learning for religious education. It has been his ideal to leave the development of the spiritual side of the boys' nature to the natural instinct of each boy. Of course, considerable help is expected from the personal influence of the teachers in this important task, but the main agent is the silent but constant influence of close touch with nature which in India is a most wonderful teacher of spiritual truth.[288]

Tagore's unlimited faith in the effectiveness of a proper atmosphere as a method of religious education arises from his belief that the subconscious mind of the children is more active than their conscious intelligence. The most important lessons that we ever learn are learnt through the environment acting upon our sub-conscious. We imbibe most of our social heritage in this way. We learn as we breathe air naturally—without fatigue and with joy. This sub-conscious faculty of knowledge is a part of our life and all that we learn through it becomes part and parcel of our being : " It is not like a lantern that can be lighted and trimmed from outside, but it is like the light that the glow-worm possesses by the exercise of its life process." [289]

(iii) *Meditation and prayer* : The element of worship is present in the religious atmosphere of Santiniketan in the form of meditation and prayer. A period of fifteen minutes is set aside both in the morning and in the evening for the purpose of meditation. To Tagore's mind, meditation is a method of attainment of truth which is quite contrary to all other methods such as observation, experiments and the process of reasoning " There are things that we get from outside and take to ourselves as possessions. But with meditation, it is just the opposite. It is entering into the very midst of some great truth, so that, in the end, we are possessed by it." [290] He believes that the highest kind of truth can be realised only by this method of merging our consciousness in the truth so that when it is realised, it is no mere acquisition, but we are one with it. This is the only way to make that truth active in our life ; " thus through meditation, when our soul is in its true relation to the Supreme Truth, then all our actions, words, behaviour, become true ".[291] In his school Tagore insists on this period of meditation knowing full well that all the boys do not meditate ; but he believes that even though

---

288. This almost complete reliance on the boys' natural instinct and on nature for religious education is a view which is difficult to accept. Tagore admits of an unbridgeable gulf of distinction between religion and other subjects and rules out religion from the curriculum. But why religion should be treated so differently from other subjects is hard to understand. If in the acquisition of knowledge in other subjects we do not depend so entirely on instinct and nature, why should an exception be made in the case of religion ? Religion is as good a branch of knowledge as any other subject in which the garnered wisdom of mankind through the ages must be of immense help in understanding it. Doctrinal teaching need not necessarily prevent an individual from taking all possible help from nature and instinct in the matter of spiritual realisation. To keep revealed religion out of all account in a sphere which by its very nature is supernatural does not seem consistent.

289. *Personality*, p. 139.

290. *Personality*, p. 151.

291. *Ibid.*, p. 152.

they may not meditate, a brief period of quiet may develop in them the power of self-control in spite of the fact that instead of contemplation on God they may be watching the squirrels running up the trees.[291] Moreover, before the commencement of the day's work and again in the evening, pupils gather together under the trees and chant a *mantra* (a Vedic text) in unison.

(iv) *Sharing as a principle of life*: When Tagore started his school at Santiniketan, the ideal uppermost in his mind was that of a school in which religious influences are transmitted to the children in the atmosphere and by the methods of a home. The basic principle of home life is sharing and so Tagore emphasizes the need for sharing between the pupil and the teacher of a life of high aspiration :

> Thus in the ancient India the school was there where was the life itself. There the students were brought up, not in the academic atmosphere of scholarship and learning, or in the maimed life of monastic seclusion, but in the atmosphere of living aspiration. They took the cattle to pasture, collected firewood, gathered fruit, cultivated kindness to all creatures, and grew in their spirit with their own teachers' spiritual growth. This was possible because the primary object of these places was not teaching but giving shelter to those who lived their life in God.[293]

While the old conditions of life could not, and did not need to be revived, Tagore was convinced that the old spirit could and should be recaptured, if education and life were to be lifted on to a high level.

(v) *Inspiration for a higher spiritual life*: The dependence on a religious atmosphere rather than on any form of dogmatic teaching for religious instruction has a special significance in a country like India where religions and creeds abound and which provides a fruitful ground for religious squabbles. Tagore admits that, in every country and in every age, owing to a diversity of historical causes, religious sects will remain and will continue to be formed. He even goes so far as to think that sectarian belief may give solace to some individuals in their inner life. Making allowance for these views, however, he looks for a wide meeting place where all sects can and might gather together and forget their differences. " Has India, " he asks, " in her religious ideals no such place for the common light of day and open air for all humanity?" [294] While the history of mankind has shown division and bloodshed owing to sectarian differences and squabbles, he feels, nevertheless, that a common meeting ground is possible as it was in ancient times in India :

> Still, in spite of all these, when I turn to look back to India's own pure culture—in those ages when it flourished in its truth—I am emboldened to assert that it is there. Our forefathers did spread a single pure white carpet whereon all the world was cordially invited to take its seat in amity and good fellowship. No quarrel could have arisen there, for he, in whose name the invitation went forth, for all time to come, was Shantam, Shivam, Advaitam,—the Peaceful, in the heart of all conflicts ; the Good, who is revealed through all losses and sufferings ; the One, in all

---

292. *Ibid.*, pp. 145-6.
293. *Personality*, p. 128.
294. Rabindranath Tagore : *The Centre of Indian Culture*, p. 50.

diversities of creation. And in His name was this eternal truth declared in ancient India: He alone sees who sees all beings as himself.[295]

Thus while admitting the inequalities and varieties of human life and differences of nature and training, Tagore yet seeks to provide inspiration for a higher spiritual life which will rise above the differences of creeds and dogmas of sectarianism and the greed for worldly goods and reputation. What is being accomplished at his school is expressed by himself in the following terms :

Yet I am perfectly certain, and proofs of it are numerous, that the ideal of the *asrama* is sinking deeper into our nature every day. The tuning of our life strings into purer spiritual notes is going on without our being aware of it. The sky here seems penetrated with the voice of the Infinite, making the peace of its daybreak and the stillness of its night profound with meaning, and sending through the white crowds of *shiuli* flowers in the autumn and *malati* in the summer the message of self-dedication in the perfect beauty of worship.[296]

(vi) *Emphasis on "the world of action"* : The *asrama* or the forest school of ancient India was a philosophic school. The student left his home and went to stay with his teacher there to lead the simple ascetic life of the learner and disciple. As the end of intelligence was meditation leading to perfection, and as the path toward such a perfection was long and difficult, the exercises which were followed by the students in order to attain that perfection were not only difficult, but obscure. Therefore, the whole of education seems to have consisted in the study of a moral and physical philosophy of a definite character.[297] Not only because of the need for the student to devote all his time to the pursuit of such a path, but also because of the fear that activities other than philosophic speculation might divert one's attention from the major pursuit and might lead him astray into paths of sensuous enjoyment and utilitarian motives, the student did not take to the gorgeous arts and crafts, the science of healing and language. Such accumulated knowledge of the arts of life was handed down from father to son and from mother to daughter. The schools and universities had no part in it and the training they gave was for eternal ends only.[298]

This erroneous attitude, which was prevalent in ancient times, is corrected by Tagore when he places emphasis on the principle of *realisation through action.* "It will never do the least good," says he, "to attempt the realisation of the infinite apart from the world of action."[299] He points out the danger that lies in attaching undue importance to contemplation :

Our partiality is for the internal world. We would cast aside with contumely the field of power and of extension. We would realise Brahma in meditation only in his aspect of completeness, we have determined not to see him in the commerce

---

295. *Loc. cit.*
296. *Personality*, pp. 136-7.
297. *Ibid.*, p. 133.
298. *Ibid.*, p. 134.
299. *Sadhana*, p. 122.

of the universe in his aspect of evolution. That is why in our seekers we so often find the intoxication of the spirit and its consequent degradation.[300]

Tagore's religion, therefore, is one in which the soul dedicates itself to Brahma through all its activities. The temple that mankind must build to God is not one built of thought but of action :

> Who is there that, sitting in his corner, would deride this grand self-expression of humanity in action, this incessant self-consecration ? Who is there that thinks the union of God and man is to be found in some secluded enjoyment of his own imaginings, away from the sky-towering temple of the greatness of humanity, which the whole of mankind, in sunshine and storm, is toiling to erect through the ages ? Who is there that thinks this secluded communion is the highest form of religion ? [301]

Since the cult of the temple with its worship and outward rites and ceremonies, and the consequent neglect of emphasis on action, had been overdone in India, Tagore advocates, not so much to take the place of the temple as to supplement it, the institution of the *asrama*. He believes that it is the *asrama*, and not the temple, where the beauty of nature and the noblest pursuits of man are in a pleasant harmony. " Our temple of worship," says he, " is there, where outward nature and the human soul meet in unison. Our only rites and ceremonies are self-sacrificing good works." [302] Thus, while " he believes in aspiration, he believes also that the will, purified in aspiring, should translate its faculty into the material and actual ".[303]

Santiniketan has a beautiful temple of glass, built by the poet's father, where, once a week and on special occasions, the inmates of the *asrama* gather together for the worship of God. The beautiful Bengali music of the devotional songs of the poet sung by the student choir, and the beauty and quiet of the surrounding nature help to lift the soul to a spiritual height where one would like to pitch his tent and live for ever. But Tagore himself would not have considered this spiritual uplifting the *summum bonum* of his educational endeavour at Santiniketan. This, according to his own view, was to be looked for in the acts of self-sacrifice and goodness performed daily toward one another and toward the neighbourhood. In the programme of the Visva-Bharati, therefore, ample provision is made for social service of various kinds in the pursuit of which students and teachers find opportunities for " self-sacrificing good works " If this sounds more like humanitarianism than religion, let it be remembered that, after all, playing the role of a Good Samaritan is as essential a part of religion as rites and ceremonies and worship, and has inestimable value in this materialistic and self-seeking world of our day.

(c) *Supernaturalism of the Jamia Millia Islamia System* : Underlying the Islamic tradition of education is the principle that there is a vital connection between the attainment of knowledge and the attainment

300. *Ibid.*, pp. 126-7.
301. *Ibid.*, p. 129.
302. Quoted in Ernest Rhys : *Rabindranath Tagore,* pp. 134-5.
303. *Ibid.*, p. 135.

of God or Salvation. In fact, the two objects are closely identified. The value of knowledge is thus described by Prophet Muhammad :

> Acquire knowledge, because he who acquires it in the way of the Lord performs an act of piety ; who speaks of it, praises the Lord ; who seeks it, adores God ; who dispenses instruction in it, bestows alms ; and who imparts it to its fitting objects, performs an act of devotion to God. Knowledge enables its possessor to distinguish what is forbidden from what is not ; it lights the way to Heaven. With knowledge, the servant of God rises to the heights of goodness and to a noble position, associates with sovereigns in this world, and attains to the perfection of happiness in the next.[304]

The pursuit of knowledge [305] thus becomes an act of worship and far more efficacious than some of the recognised acts of piety.

This placing of a high value upon knowledge grows out of the belief that knowledge proceeds from, and is inspired by, God. Thus it was that in the early days of Islam the pursuit of knowledge was classed with religious exercises as deserving of every devout Moslem's attention : " The practice of religion, the conservation of a devotional spirit, and the special cultivation of these branches of learning which were of practical value in the battle of everyday life, were the primary objects of the Moslem's attention." [306]

(ii) *Cultivation of a religious spirit* : True to this Islamic tradition and conviction, the Jamia places supreme emphasis upon religious teaching. While it regards the attainment of secular knowledge in itself as an act of piety, it goes a step further and regards sacred knowledge, knowledge about the very inspirer of that secular knowledge, to be of highest value. Religious instruction and the cultivation of a religious spirit through it thus assumes an importance above everything else. This is made clear in the argument that led to the foundation of the Jamia " A nation does not thrive on the degrees held by its members but on the virtues they possess. And a university that does not inspire the youth with the religious and civic ideals of the people is a dangerous farce." [307] What is aimed at is not mere religious instruction, but the cultivation of a religious spirit which should pervade every individual member of the school and inform his conduct individually and collectively, so as to be fruitful of the highest social and moral results. The Jamia " is a religious institution, because of its profound reverence for religion and its belief in the supreme efficacy of the religious impulse as a creative and preservative social force ".[308]

(iii) *Conflict between Religion and Irreligion* : While the religious purpose of the Jamia is derived from the Islamic tradition of education, its importance, at the foundation of the school, was pressed to the serious

---

304. Quoted in Ameer Ali : *The Spirit of Islam*, pp. 360-61.
305. It may be noted that the knowledge meant here is not necessarily what is known as sacred knowledge, but even what is called secular knowledge.
306. Quoted *Ibid.*, p. 362.
307. Mohd. Mujeeb : *The Jamia Millia Islamia*, p. 1.
308. Mohd. Mujeeb : *Jamia Millia Islamia*, Visva-Bharati Quarterly, August-October 1946, p. 112.

minded persons by the religious situation of the country. India, it had long been felt, was passing through a religiously critical period. The unique distinction she had of being the home of various religions did not help her in the situation. There was in evidence a deep-seated conflict, as one viewed the situation, not between one religion and another, but between Religion and Irreligion. Not long after the founding of the Jamia its Principal Dr. Zakir Husain, who in a very real sense is the philosopher of the Jamia, said as follows addressing an international gathering "The salient feature of the religious situation in India is the danger in which we find not this religion or that religion, but Religion itself. We see in India, as everywhere else in the world, the coming to grips of Religion and Irreligion—Belief and Disbelief—of Faith and Doubt—of the Ideal and the Material—of Heaven and Earth. The chief feature of the Indian religious situation to a discerning eye is the swelling tide of Disbelief."[309] Having said this he went on to analyse the cause of Disbelief which, according to him were, "the rigidity of dogma, its incompatibility with changing conditions, the increasing consciousness of the hollowness of mere form, the growing importance to the individual of outward as compared to inward goods, the sense of relativity of all objective values, and the absolute rule of all intellect and a thorough-going rationalism."[310]

(iv) *Belief in the super-intellectual world* Zakir Husain believes that the world of intellect is inadequate for human life and that the highest values of life are not those that emerge from man's own intellect, but come from the super-intellectual world, not as man's own attainments, but as gifts. What he believes is well-worth quoting :

> There is none to tell the intellect that our will does not receive its guidance from the twilight of intellect but from the higher and purer regions of the Soul. In this region we already tread on the firm ground of belief and faith, from which the springs of all higher human efforts have always come. There is none to tell the sceptic that the intellect can choose only between the comparables it is the will which makes the choice between what is incomparable and only an inner directing power leads it in the choice. We are constantly weighing incomparable things one against the other and constantly deciding this way or that. The guiding stars of our will are absolute values, they can be named, they cannot be proved. Even as the time-table does not determine the land we long for, so neither can intellect give us the guiding values. They are either there or not there. Values are not thought out; they are bestowed—bestowed on him who is pure in heart and humble in spirit and whose mind can be silent with prayerful silence. They are gifts from the super-intellectual world and require no proofs. They come from the realm of the soul. The entrance to this realm is always open and yet you cannot force your way to it. It is open to the loving power of belief and faith.[311]

This belief in the super-intellectual world which always guides the highest actions of man is thus the fundamental doctrine of the man who has, for over twenty years, shaped the atmosphere and activities of the Jamia

---

309. Zakir Husain: *The Situation in India from the Point of View of Islam*, The Student World, Vol. XXII, No. 3, July 1929, p. 249.
310. *Ibid.*, p. 254.
311. *Ibid.*, pp. 255-6.

Millia. That he has not changed his position is clear from the fact that time and again he has re-affirmed it in unmistakable terms as he did in a radio talk recently when he said : " I believe in believing. I believe that our will, in all its decisive and significant operations, receives guidance, not from the twilight of the intellect, but from the broad daylight of belief. It is through belief that values of life are created and shaped ; and it is these that move and regulate the whole of our volitional being. It touches and transforms the innermost conscious essence of our being." [312]

(v) *Importance of Belief to the individual and society* : In these pregnant statements one can discern the fundamental doctrine of supernaturalism which asserts that man's own powers are inadequate to help him to live a full and abundant life. He lacks something which comes from the world beyond his intellect—the world of Spiritual Reality. As Ameer Ali puts it : " Man's consciousness of a supreme, all-pervading Power ; his helplessness in the eternal conflict of nature ; his sense of benefaction,—all lead him to pour out the overflowing sentiments of his heart in words of gratitude and love, or repentance and solicitation to One who is ever-wakeful and merciful." Zakir Husain extends the application of the principle of Belief from individual life to that of society and points out that it is always the force of belief that helps society to live and hold together. Belief is the permanent current running through the social structure of centuries which would tumble down if it were removed :

> And when such a belief is destroyed, it is not only the work of generations past that is ruined ; many generations to come may not find in the wreckage a single foundation sound enough to build on. That is why men with healthy instincts and sound views have always insisted upon the maintenance of traditions and of respect for transcendental values.[314]

So would Zakir Husain urge the youth of his time to have

> Respect for and a belief in, an unconditional belief in, another transcendental world, a belief that this other world throws its light on this earthly world of ours, a belief in the meaning and purpose of the Universe of which we are a part and in which we have a place to fill and a purpose to serve, a belief that our earthly career acquires meaning and significance by belonging to this higher world, a belief that life has an aim which leads beyond all that is of this earth earthly, a belief which has been simply and briefly called throughout the ages as belief in God.[315]

(vi) *The place of Islamic studies* : With Islam as its focussing point, the Jamia system has at its heart a supernaturalistic programme showing itself in the religious curriculum that runs right through the fourteen classes of its primary, secondary and university sections, and in the religious routine which every student is expected to conform to. The Jamia follows the tradition of the old Muslim schools which made

---

312. Zakir Husain : *What I Believe*, a radio talk, 1946.

314. Zakir Husain : *Inaugural Address*, Agra University Students' Federation Conference, 1941, p. 14.
315. *Loc. cit.*

the study of Arabic, and the *Quran*, compulsory for all Muslim students. Islamic studies are given a prominent place in the curriculum from the first to the highest class. In the primary classes the students are taught the *kalama* or the creed from the *Quran* and the prayers. As they go higher up they are introduced to the *Quran* itself. Moreover, the school attempts to give the proper background in the study of the *Quran* and its allied subjects. Islam is not native to India. It had its birth in distant Arabia in an environment of geographical, social and economic conditions very different from those of India. If Islamic teaching is to be fully understood and imbibed, it should be closely related to a study of the environment in which it sprang. Therefore, prominence is given to the study of Arabia as a country whose physical features and social and political institutions had a share in the shaping of Islam at its initial stages. Similarly, a great emphasis is laid on the study of Islamic history taking within its sweep the rise and progress of the various Muslim States of the world. The whole is to be studied " in closest correspondence with the moral and political ideals of Islam ".[316] The aim is to study Islam in its entire worldwide setting so as to bring out the eminence and mission of Islam described by Zakir Husain as follows :

> But the spirit of the faith that made out of barbarians civilized men, out of disbelievers that gave to women a status in a society where she had none, that set aside all distinction of caste and race and birth and recognised only an aristocracy of character in a brotherhood of men, that Islam shall remain and shall contribute its share to the future faith of men.[317]

(vii) *Religious routine and atmosphere* : Alongside of this study of the Islamic doctrine in its historical setting there is in the school provision for a routine or religious life which every student is expected to follow. For instance, there are the five daily prayers that a Muslim is enjoined to say, for which all come together in the mosque. But realising that routine and compulsion might in course of time empty the very essence of religion out of the forms that one goes through daily, emphasis is placed on the promotion of a religious atmosphere consisting in brotherly relationships between the members of the group and a devotion to God in daily life that the teachers evidence in their contacts with the pupils.

(d) *Supernaturalism of the Wardha System*: With its strong humanistic outlook, supported by a desire for individual and social well-being in the economic sense, the Wardha system may be said to have no supernaturalistic trend in its underlying philosophy. If it has any religion at all, it is one without God, which in recent years has come to be known as Humanism. A. C. Krudson characterises it thus : " What humanism preaches is self-help, not dependence on Providence. ' Human control by human effort in accordance with human ideals '—such is the programme of the new humanistic religion. God and theology have no

---

316. *Syllabus of Studies for the Senior Jamia and Degree Examinations*, 1943, 1943-44, pp. 5-6.

317. Zakir Husain : " The Situation in India from the Point of View of Islam ", *The Student World*, Vol. XXII, No. 3, July 1929, p. 200.

place in it."[318] It is claimed that the Wardha school "encourages the cultivation of moral virtues",[319] but the morality implied here does not receive its sanction from religion, especially revealed religion. It is based on "the enlightened experience of the race in many fields of activity" and especially "upon co-operative human labour".[320] A great deal is expected of the principle of co-operative labour as a fruitful source and powerful generator of moral virtues:

> The principle of co-operative labour cannot fail to evolve ideas of truth, love, justice, peace and discipline. No co-operative enterprise can work without these virtues among the co-operative units. Without love and non-violence the enterprise will lack cohesive organisation, proper and purposeful co-operation. Many other practical individual virtues must result from work carried out with a purpose and that of public corporate good.[321]

It is clear from the above statement that the virtues that have been inculcated by religion all through the ages and that have been its special field are now sought to be inculcated by co-operative labour. Such labour has become a necessity in the present world; those virtues are indispensable for a successful working of it; therefore, they will come without any religious aid—that seems to be the line of argument. In other words, man has outlived the necessity of religion. We need not enter into a theological discussion of the question, but would quote Knudson's characterisation of such a position to merely raise the question whether it is satisfying or not:

> But the religion of the future, they (the humanists) maintain, will be a religion without belief in a supernatural and spiritual world, a kind of decapitated religion, which will still manage somehow to keep alive through the beating of the heart.[322]

It is interesting, however, to note that while men like Kripalani are so dead set against supernaturalistic religion as to give it no quarters in their scheme of education, there are some who would like to buttress their philosophy of work and labour with a supernaturalistic reference. One such writer is Bharatan Kumarappa, who as an advocate of the philosophy of "villagism" must of necessity accept the principle of co-operative work. But he tried to raise work into the region of the supernatural with a view to giving it the "sanction" that he evidently thinks it needs, and from no better quarters than that of the supernatural:

> Work in such a society will be worship in the real sense of the word—a means of identifying oneself, not merely in thought but in deed, with the wider self of the community, and thus with the universal Self of all being. Economic life will then be raised to a spiritual level, and instead of work being degraded into servitude done anyhow merely with the idea of earning one's bread, it will become transformed into a means of reaching the Divine, a labour of love, done for the good of one's neighbours, and leading the individual out of his own little self into the wider self of the community and thus to the Universal Self which abides in all alike.[323]

---

318. A. C. Knudson: *The Doctrine of God*, p. 35.
319. J. B. Kripalani: *The Latest Fad*, p. 60.
320. *Ibid.*, pp. 60-61.
321. *Ibid.*, pp. 61-62.
322. A. C. Knudson: *op. cit.*, p. 37.
323. Bharatan Kumarappa: *Capitalism, Socialism or Villagism?*, p. 198.

(ii) *A sociological study of religion*: In a very restricted and special sense, however, the Wardha System has a place for religion. Perhaps it would be more correct to say " for religions ". But in this sense religion is not studied from the point of view of belief and faith, but from the point of view of its sociological importance in the study of the history of mankind. It thus becomes a part of the study of social sciences, one of the objectives of which is " to develop mutual respect for the world religions ".[324] The course is described as " a course in history, in geography, in civics and in current events, combined with a reverential study of the different religions of the world showing how in essentials they meet in perfect harmony ".[325] In this sense, however, religion ceases to be religion and becomes a branch of sociological studies involving, not beliefs, but the influence its many forms have had on the social and political history of the race.

(iii) *The omission of religious instruction*: It is very surprising that Gandhiji who himself has repeatedly deplored the irreligiousness of the educated youth, has suggested no provision in the scheme for religious education. In answering criticism on this score he once argued that the scheme did emphasize the religion of self-help.[326] One cannot find much satisfaction in the answer. The religion of self-help, though very valuable, does not represent all the aspects that the term ' religion ' connotes. Self-help is an elementary virtue and not in the least calculated to lead one to God. Gandhiji is a little more satisfying, though not entirely, when, in another place, he answers the question thus :

> We have left out the teaching of religions from the Wardha Scheme of Education because we are afraid that religions as they are taught and practised today lead to conflict rather than unity. But on the other hand, I hold that the truths that are common to all religions can and should be taught to all children. These truths cannot be taught through words or through books—the children can learn these truths only through the daily life of the teacher. If the teacher himself lives up to the tenets of truth and justice, then alone can the children learn that truth and justice are the basis of all religions.[327]

To say that the children can learn these truths *only* through the daily life of the teacher implies that formal instruction is absolutely unnecessary. This is where one cannot agree. Great religious teachers have preached both by life and word. Nevertheless, Gandhiji does believe in some kind of religious instruction, to be given not by precept, but *only* by example. Here he is trying to reconcile the two contrary positions on the question by a *via media*, perhaps to his own satisfaction, but not to the satisfaction of most people.

(iv) *Kripalani's View* : Kripalani's position on the issue is as clear as it is uncompromising. He considers it in the fitness of things that while emphasizing the moral training which should be imparted through manual work and the personal life of the teacher, the Wardha Scheme

---

324. *Basic National Education*, p. 20.
325. *Ibid.*, p. 20.
326. C. J. Varkey: *The Wardha Scheme of Education*, p. 109.
327. *Educational Reconstruction*, pp. 63-64.

makes no provision for the teaching of particular religions. He also claims that far from being anti-religious or godless as the educational system of Russia, the scheme by its non-provision of religious instruction gives the utmost freedom to the pupils and their guardians in religious matters. The parents are free to provide any religious education they wish for their wards. The State does not belong to any particular denomination or religion, but to all ; and, therefore, it must leave the delicate and highly complex matter of religious education to the free choice of the individual. Religion will be the private concern of the individual, and he will be free to decide his relation with his Maker, if he believes in one or between him and his inner, deeper and profounder instincts.[328]

On purely practical grounds, one may not find it difficult to agree with Kripalani and the Wardha Scheme in the exclusion of religious instruction from the syllabus. In a country like India where religions abound and in this generation when religious strifes have resulted in intolerance and bloodshed, one can sympathise with a view which excludes religious instruction from schools for fear that it may lead to religious or communal trouble. But when Kripalani goes on to point out positive advantages accruing from the absence of religious instruction from the system one is held back from agreement. He says : " The result of this will be the spiritual emancipation of the individual. It will give an immediate accession of strength to ideas of good will and tolerance." [329] The implication of this view is that religion causes spiritual enslavement and that it is in its nature to promote intolerance. The view has been based evidently on the working of false religion which certainly has produced intolerance and fanaticism, but true religion must be distinguished from false, and the sins of the false should not be laid at the door of the true. An enlightened age like ours, and we depend for many things on our enlightened conscience, should try to separate the wheat from the chaff and retain the wheat rather than throw everything away because there is chaff in it. We have done that with other subjects like history or chemistry or mathematics, and have tried to correct the errors of the past generations and added new knowledge. Is not the same procedure possible and reasonable with regard to religion ? To discard religion entirely because it has been a source of trouble would be like throwing the baby away with the bath water. If the exigencies of the present situation demand the exclusion of religion from the educational system, when better times come the exile should be allowed to return, for it is one of the most precious heritages of mankind and one of the most potent factors in the culture and civilisation of the race.[330]

9. *Contributions of the Four Systems of Educational thought* : We started on our inquiry with the axiomatic assumption that every educa-

---

328. J. B. Kripalani : *The Latest Fad*, p. 62.
329. *Ibid.*, p. 62.
330. For a further discussion of the question, see C. J. Varkey : *The Wardha Scheme of Education*, pp. 108-112.

tional system is eclectic in nature and that it draws upon more than one philosophy of education for its basis. In the course of our inquiry, we have seen that the four philosophies of education—Idealism, Materialism, Humanism and Supernaturalism—are present in greater or less degree and in some form or other in each system studied, the only exception being the Wardha System which does not show any trend of supernaturalism in it. However, it is clear that while each system has drawn its philosophic sustenance from more than one philosophy, its main basis has been only one or the other of the four philosophies giving it its characteristic shape and colour. The Gurukula is predominantly supernaturalistic, the Visva-Bharati humanistic, the Jamia Millia idealistic, and the Wardha materialistic. Let us look at this proposition a little closely.

The Gurukula Contribution

It may be said that one of the most outstanding contributions of Indian thought in the field of education is the *emphasis on the supernatural aspect of life and on the vital connection between the Supreme Being and the training of the intellect and will and the acquisition of knowledge.* The Gurukula shows this trend in the most pronounced manner.

(ii) *The principles of "brahmacharya"* There are some other principles, too, in which the Gurukula displays the Indian mind reacting to the problem of education. The first is the practice of *brahmacharya.* There is no doubt that the easy life of luxuries that the present-day student in India, especially in the college and university leads or desires to lead, is not in the interests of his own or national well-being. The ideal of *brahmacharya* is not to be regarded as an ancient myth that has been out-moded. It has a real message for the country and the world today. That is why Gandhiji, in his talks to the students reiterated it as he did. In a world full of luxuries and artificialities of life, the message of *brahmacharya* with its implications of austere simplicity and self-control must have an elevating influence.

(iii) *The teacher-pupil relationship*: Another contribution of great value is the ideal of a school being a Gurukula or the teacher's home. Its significance for our times lies in the teacher-pupil relationships. In the West the pupil gets attached to the school or college or university and calls it his *alma mater.* The loyalty is to the institution. In India it has been found difficult to arouse such loyalty on the part of the students. Their loyalty, in conformity to the Indian genius and tradition, is to the teacher. In the institutions modelled on the West, the teacher-pupil relationship is not usually of a personal kind such as the Gurukula advocates. In the first place such a relationship makes for individual treatment which all educational thought must recognise as the highest ideal of achievement in education. In the modern Gurukula, the ideal of "one pupil, one teacher" cannot be fulfilled; but a paramount stress on individual attention and treatment is one of its chief features. Furthermore, in this relationship the Guru or the teacher

takes the place of what Freud calls the Super-Ego of the individual pupil, that is, the embodiment of the ideals and traditions in which he is brought up. Again, Radha Kumud Mookerji explains :

Every individual is subject to an innate conflict between a sense of what he is and what he *ought* to be. He imbibes the ideals and traditions of his society, which regulate his life from the outside, or from the plane of the unconscious. In both cases, he feels himself to be the passive instrument of social or mysterious forces. The ideals, however, are sometimes assimilated as parts of his conscience or Super-Ego, when his actions come under the regulation of his own self, though not without a conflict between the different parts of his nature. The inner conflict is resolved by the Guru, to whom a different personality, the pupil can project his Super-Ego. The ideals can now more easily enforce themselves, as there is no longer now any loophole for ignoring them, as one could in the matter of one's own thoughts suggesting them.[331]

(iv). *Moral and religious character* : As a supernatural system, the Gurukula aims at a complete and all-round development of the individual. Among the many things that it emphasizes, the chief is the moral and religious character. " The educational head of the Gurukula is called the Acharya. *Nirukta* defines Acharya as one who trains the pupil in good moral character. The first and foremost duty of the Acharya in the Gurukula is to see that the pupil be trained in good character." [332] The training of intellect takes a second place to the training of character. This has been so even in the ancient tradition of education of which the Gurukula is a revival. The ancient view was " that mere intellectual development without the development of character, learning without piety, proficiency in the sacred lore with a deficiency in the practices it implies, will defeat the very ends of studentship ".[333] Moreover, it should be noted that the emphasis in the Gurukula is on building a *religious character*, for it takes the view that no strong moral character can be secured without intense religious training, and that moral instruction without the aid of religion will not go far enough.

The Gurukula System, as we have remarked before, is an indigenous system, with indigenous principles of educational philosophy and psychology. There are many times when weary of the present-day standards and ideals we turn to the good old days. We may do so in education too, and when we do, we shall find the past of India not at all bankrupt, but revitalising and reassuring. There is no doubt that the Gurukula, as it embodies the genius of India and her past tradition in the field of education, will offer much that we moderns can immensely profit by. What is true of Dayananda's general religious contribution is also true of the educational system that he tried to re-introduce :

To seize on a vital thing out of the past and throw it into the stream of modern life, is really the most powerful means of renovation and new creation. Dayananda's work brings back such a principle and spirit of the past to vivify a modern world.

---

331. *Ancient Indian Education*, xxviii.
332. Satyavratha : *Fundamental Principles of the Gurukula System*, p. 7.
333. Radha Kumud Mookerji : *op. cit.*, p. 205.

And observe that in the work as in the life it is the past caught in the first jet of its virgin vigour, pure from its sources, near to its root principle and, therefore, to something eternal and always renewable.[334]

The Visva-Bharati Contribution

The Visva-Bharati is predominantly humanistic. While Tagore places great value on naturalised education, which was mainly because education in his day had become formal, and detached from life and its realities, it is clear that philosophically he is not a naturalist. He is an advocate of the methods of naturalism in education, but his spirit is definitely humanistic. Naturalism is essentially a monistic doctrine ; Tagore believes in the dualism of human nature and he emphasizes what Mercier calls " the second element in man's dual nature, the spiritual element of a higher will ultimately divine ".[335] Tagore's humanism is not incompatible with religion. Naturalism with its monism makes all religion impossible in the sense of a link between man and something above nature, since monism merges nature, man and God in one on the material level. Humanism with its dualism of the spiritual and the natural, and its belief in a spiritual realm above nature, " not only points to the need of a religious meditation, but puts man in an attitude of receptivity toward religion ".[336] Tagore's humanism is inclined more to religion than to monistic naturalism : it is on a height where man is satisfied with communion with himself. We have seen that while the Visva-Bharati does not lay a great deal of stress on the religious aspect of life, there is an unobstrusive and natural place given to worship and meditation.

(ii) *Importance of the study of humanities* : The main element of humanism discernible in the Visva-Bharati is the importance it attaches to all that human intellect or man's creative faculty has produced : especially in philosophy, literature and art. In these three spheres of pre-eminent creative activity the Visva-Bharati sees the possibilities of the fullest development and contribution of man's powers. Perhaps it is true to say that it is in these rather than in any scientific achievements that the true advancement of man lies. Educationists in India have in recent decades cavilled against literary education and advocated scientific and technical education. They think that the cult of the literary or humanistic studies has been overdone, and if India is to take her place alongside of the nations of the world, her education must be more and more scientific or vocational. There is considerable force in the argument that India needs scientific education, but certainly not at the cost of education that forms character and promotes good life. There is a feeling that literary education is of little worth in the world, but the serious mistake of such a view was seen by Tagore when he toured Europe after the first World War and saw that there was need for higher ideals in the education of man than mere scientific education

---

334. Aurobindo Ghose : *Dayananda, the Man and His Work*, p. 9.
335. Louis J. A. Mercier : *The Challenge of Humanism*, p. 176.
336. *Ibid.*, p. 177.

could ever give. What Tagore felt after the first World War has also been felt after the second. Richard Livingstone, while acknowledging the great help received from science by mankind, still feels that it does not help man to live worthily. He says : " In the last twenty years the West, at the height of its civilisation, has seen human nature guilty of crimes to which history has no parallel." [337] He advocates an education, therefore, which will help man " to see the vision of excellence, so far as our limitations allow ; to get at least a glimpse of the unchanging values of the eternal world as they are revealed in whatever is beautiful and good in the material world of earth ".[338] The study of humanities gives an answer to this pressing need of the world. Men at times look with disapproval on old and ancient subjects like the classics and philosophy and think them out of date. But they can never be out of date. They deal with human problems that arise from the constants in humanity and so are as contemporary as life itself. " Modernity is a question not of date but of outlook ".[339] The need for humanistic education that is pressing itself so forcibly upon the attention of the western thinkers at present was recognised by Tagore when he decided to make the Visva-Bharati a centre of humanistic studies and cultural advancement. Tagore believed in the value of studying and appreciating what the creative mind has produced not only in India, but in the whole world. In a large measure Tagore's emphasis on cultural education may be compared to the emphasis that the European Renaissance placed on literary and artistic education. Tagore was moved to it by the fact of European materialism leading to war and making itself felt in Indian thought. He had a strong belief in the elevating influence of art, literature and philosophy on the mind and conduct of man and was convinced that if the forces of culture rather than the forces of materialism were let loose in the world, peace could be achieved. He believed with Aristotle that " it is not the possessions but the desires of mankind which require to be equalised ",[340] and this can be done only by a humanistic culture such as he tried to give at Santiniketan. The stress that he, therefore, laid on the studies usually classed as humanities—art, language, literature, philosophy, religion and allied subjects [341]—makes the Visva-Bharati a predominantly humanistic institution.

(iii) *The " asrama " or the " forest college "* As an expression of the mind of India, the Visva-Bharati has made its contribution mainly in three ways : First of all, it has called attention to the institution of the forest college or *asrama* of ancient India as an indigenous school. It symbolises Indian civilisation and typifies Indian life which has been from times immemorial been lived in the lap of nature, thus establishing a kind of relationship in which self-realisation was possible through communion and harmony with nature. Such life has given to India its contemplative temper and with it, all the speculative thought for which

---

337. Richard Livingstone : *Some Tasks for Education*, pp. 31-32.
338. *Ibid.*, p. 50.
339. *Ibid.*, p. 5.
340. *Politics*, II, 7.
341. F. W. Thomas and A. R. Lang : *Principles of Modern Education*, p. 146.

India is famous. Tagore's forest school came as a revolt against the brick-and-mortar civilisation that seemed to be gaining ground in India through its contact with the West. Especially in respect of educational institutions he deplored the craze for outward show in buildings and equipment which tended to minimise the supreme importance of the spiritual communion that the pupil should have with the universe around him. The need for man to be in contact with nature again shows itself in his partiality for the village as against the city, and his definite effort to resuscitate the Indian village. Indian civilisation is by nature and tradition a rural civilisation in which life in the open air and in communion with nature and social ideals of community living are predominant. In the Visva-Bharati Tagore tried to recapture the essential expression of Indian genius, namely, a life not led in quest for power over nature but in harmony with nature.

(iv) *The principle of unity* : This yields to us another principle that is genuinely Indian and that seems to have been lost sight of in this day. The Indian philosophic belief in the unity of all creation needed emphasis. We have noted how Tagore was overjoyed when Jagdish Chandra Bose made his discovery of the existence of sentient life in the vegetable world. Tagore was looking for something that would show that all life was one and he believed that only as man realised this oneness of life that runs through the universe can he have a true perspective of the problems of God, man and nature. To this end, therefore, he made Santiniketan a place of unity. Through its open air life it brought out the aspect of unity with all nature and universe and placed man, not in a cage by himself, but in the universe, where he belongs, at liberty to fraternise with the life around him and so attain to a harmony and unity with all life. Another in which this unity came to be symbolised was to make the school a centre of culture not only for the varied elements of Indian cultural life, but also for the cultures of the world, taking for its ideal and motto the *sutra* " Where the whole world finds its shelter Santiniketan thus came to symbolise the great Indian principle of unity that runs through all creation and mankind.

(v) *The spiritual emphasis* The Visva-Bharati gives the highest place to the things of the mind and the things of the spirit. That has been the Indian tradition. India's preoccupation with the realm of the spirit is well known. We may not agree, not merely out of humility but out of conviction, with the arrogant saying that the East is spiritual and the West is materialistic, but we may suggest in all humility that it has somehow transpired that the Indian mind has come to have a greater interest in the spiritual things than in the material. With the advance of science and the multiplication of the means of comfort, which make for civilisation, the inner things of the spirit come to the neglected. We have already noted that this came to be a great concern on the part of Tagore. He believed that it is not civilisation that will save mankind, but culture, the product of the best mind and feeling of mankind. Though civilisation and culture are hard to consider as separate, there is a difference between them as civilisation has to do with the

environment in which we live, and culture is concerned with life itself and the way it is lived. It is the cultural aspect of life that Tagore held as important over against the civilisation aspect, for it is culture and not civilisation that is concerned with the values by which we live. To Tagore it is life, the culture of the mind and spirit, that mattered, and not civilisation. This is typically an Indian attitude, in the emphasizing of which Tagore has revealed the mind of India.

The Contribution of the Jamia Millia

The Gurukula and the Visva-Bharati are experiments at a definite revival of the ancient tradition of education in a modern setting retaining as much as possible of the old-world ideals and atmosphere. The other two systems, the Jamia Millia and the Wardha, while reviving and retaining a modicum of native thought have freely drawn upon western thought and practice in education. It may be questioned whether in any sense they can be regarded as Indian or indigenous. While admitting that these two systems have adopted a great deal of the thought and practice of the West, we still feel that they are not exact copies of any of the western systems. In them the West has been engrafted upon the East, the core still being Indian. It is this core that brings them to some extent in line with the two great systems we have already considered.

(i) *Parallelism between typology and the Indian tradition*: The Jamia Millia is predominantly idealistic. Adopting the German philosophy [342] of the types, it lays stress on the development of what is innate or inborn in the individual. The mental relief or psychological constitution is the starting point of the system. Every individual is unique and belongs to one of the several types—the theoretical, religious, social, artistic and technical—and his education is to be in accordance with the mental relief that he has inherited. The main emphasis is on development of individuality culminating in a social personality. As we have noted " the bud theory " of Zakir Husain is not different from " the plant theory " of Froebel, the greatest educational idealist. Just as Froebel " believed that the individual's potentialities existed in a dormant state in his original nature from childhood, and that it was the function of education to awaken these latent powers and stimulate them to their fullest possible development ",[343] so does Zakir Husain lay stress on the development of the inner make-up or mental relief of the child which must be brought to its full development by nurture on the cultural goods appropriate to that make-up. Although human beings have much in common, yet each individual is unique and possesses his own physical and mental characteristics. The differences which distinguish one pupil from another are educationally important and must be recognised and utilised by the teacher. Since individuals are not alike it is most unpedagogical, unjust and undemocratic to treat them as though they were alike.

---

342. Zakir Husain acknowledges his debt in this regard to Sigwart, Windelband, Rickert, Dilthey, Schleiermacher, Bahnsen, Ribot, Fouille, Spranger and Kerschensteiner (*Welcome Address*, All-India Educational Conference, 1934, p. 9).

343. F. W. Thomas and A. R. Lang: *Principles of Modern Education*, p. 48.

It is interesting to note the parallelism that shows itself here between this doctrine, adopted from the German thought, and the practice of individual treatment that prevailed in ancient India. In Zakir Husain's educational creed three things stand out as most noteworthy. First, that there is an inherent mental relief or constitution in every pupil, which must be nourished into full development; second, the principle that this mental relief must be nurtured on the cultural goods of society appropriate to it; and, that the individuality of the educand must be fully developed into a personality. There is the individual on the one hand as an organism with an individuality of his own, and society, on the other, with its environment and traditions. These two are brought into contact with each other through the process of education resulting in the individuality of the educand developing in and through the social context into a personality. A great deal similar has been the Indian tradition of education which emphasizes all these three elements in the educational phenomenon.

(ii) *Importance of the spiritual life of the group*: An important phase of the idealistic thought of Zakir Husain is the importance given to the cultural group or the cultural goods of a community. As we have observed, idealism does tend to extend itself from the individual to the group, making the life of the group of enduring value. In its extreme form it subordinates the individual to the group as in Nazi Germany and Fascist Italy. The individuality of the group is considered more important than the individuality of the individual and the group is looked upon as the parent of the individual's spiritual being. While it would be wrong to say that the idealism of the Jamia is like the German or Italian idealism, there is present, nevertheless, the germinal thought that the group and its cultural heritage and values must have an influence on the individual. When Zakir Husain speaks approvingly of the denominational schools as preserving the individuality of the cultural or religious groups, and advances the view that the individual had best be nurtured on the cultural goods of the group to which he belongs, he does in a certain sense admit of the importance of the group in the education of the individual. When it is remembered that the Jamia is an attempt to evolve a pattern of life for the Indian Muslim, it becomes clear that the pattern of life of that community will to a great extent influence and modify the growth of the educand. It would be far-fetched and far from the truth to say that the individual is subordinated to the interests of the group, so that his development is chiefly in the interests of the community, but nevertheless it is true that all those who study at the Jamia are saturated in the cultural heritage of the Muslim group which has " an age-long spiritual life from which the individual spirit, with its private will and conscience, draws whatever measure of reality it possesses ".[344] When we further remember that the tendency of the Muslim group is to stand together as a group for religious and communal purposes, in fact that is the tradition on which it has been brought up, with a sense of absolute obedience to whomsoever it

344. T. Percy Nunn: *Education: Its Data and First Principles*, p. 11.

acknowledges as its head, the direction in which its idealism would tend; given appropriate circumstances, becomes obvious. It is only fair to state, however, that in the present state such a tendency is not visible, and the broad democratic principles are given prominence in theory and practice.

(iii) *The community or group ideal* : Without stretching the point here, too, we may see a parallelism between the Indian ideal and the ideal of the Jamia Millia. As Tagore has pointed out, the Indian civilisation is a rural civilisation, and if true Indian culture is to be revived the rural ideals must gain ascendancy. Gandhiji too had pinned his attention on the villages of India as forming and representing the country. The philosophy of villagism that is gaining support, especially with the followers of Gandhiji, lays stress on the sense of community living that is the chief characteristic of village life. We have already noted Tagore saying that the city fosters individualism and the village fosters communism. The emphasis on the community ideal is a form of idealism that considers the community or the nation as more important than the individual. Between the Indian view and the Jamia there is here a point of contact that may be noted. The group ideal has been specially fostered in India since India has been the meeting place of numerous cultural groups that do not wish to lose their identity in the vast heterogeneous mass around them. The Jamia represents a tendency that has been peculiar to India in relation to its cultural groups. If the individual is, in the last analysis, to be preserved, the group must be preserved too, in its pristine character and distinguishing characteristics. A group-consciousness, giving the group a large hand in the determination of the cultural and other environment is thus a feature of the Indian situation and shows itself markedly in small religious and cultural communities. We have nothing to say against such group consciousness. If kept within proper bounds it is calculated to enrich the life of the nation by the variety it will bring in and promote. The danger of course is always present of some kind of Nazism cropping up through it.[345] But if a sane balance is maintained between the rival claims of the individual and the group, the danger can be always averted.

The Contribution of the Wardha Scheme

The Wardha Scheme is predominantly materialistic, if not definitely in its philosophy at any rate in its methods. That it has no supernatural tendency we have seen, and its idealism is very thin and resides in certain principles of social organisation that might be considered humanistic by some. Anyway, its predominant notes are naturalism and realism. Its naturalism may not be materialistic, may only be biological, but it is so much preoccupied with the social and economic well-being of the individual and the group that the heights of idealism such as we may see in other schemes are not at all in view.

---

345. There are many who feel that the Muslim League was a form of Nazism.

(i) *The scheme conditioned by the economic factor*: The realism of the scheme consists primarily in the economic considerations that were at the back of Gandhiji's thinking. He set out in this scheme to give a training to the villager that would make him economically independent and self-sufficient and free from the exploitation of industrialism. The economy that lies at the root of the scheme is based as we have seen on the principle of decentralisation of industry and agriculture. That is one of the chief elements of the Gandhian philosophy. There is thus a close alliance between economic order and education. This is nothing new and is as it should be

For a philosophy of education to have a significant content for the individual or society, it must be framed by the particular circumstances of time and space. One of the chief dimensions of such a frame of reference is the economic. Of the uncriticised assumptions which frequently underlie educational practice perhaps the economic are the one of which lay and professional people are least aware. Yet, in spite of this relative neglect or customary oversight, the economic factor is one of the most powerful ones conditioning the theory and practice of education.[346]

The economic philosophy behind the scheme is what has been called "villagism" with its emphasis on cottage industries and agriculture. Spinning and weaving are to be the chief industries of the village in addition to agriculture. The emphasis on vocational education as a feature of realism is not ignored. The whole scheme is intended to train the children in the occupations that they will undertake in the environment in which they are and will be living. The craft is at the centre of the syllabus since it tries to unite in itself the two ends of physical and social environment. The craft is the thing that gives direction to the whole course of education.

(ii) *Craft-training in ancient education*: Craft-training is not a new thing in India. In olden times it was given by craftsmen to their apprentices, and the system became so rigid as to emerge in the evil of caste system. Craft-training has, therefore, become an inherent element of Indian education. The return to the craft, however, does not imply a return to the caste system. Craft was the core and the caste system only the outward organisation to help it function. In our times, however, the caste is to be dropped and the craft developed on democratic lines.

(iii) *The principle of non-violence*: Gandhiji wanted to evolve a system of education which was suited to the genius of India. It may be said that a system of craft education is best suited to the genius and conditions of the people of India, for the true nature of the civilisation of India has always been rural, and, according to Gandhiji, must remain rural. But what makes the scheme Indian is not so much its methods as the ideology behind it. We have noted already that the chief element of its ideology is the principle of non-violence which is characteristically Indian. Gandhiji further believed that this law of non-violence must permeate the whole of life and not only one or two activities of life. He says: "Non-violence to be a creed has to be all-pervasive. I cannot be

346. J. S. Brubacher: *Modern Philosophies of Education*, p. 167.

non-violent about one activity of mine and violent about others. That would be a policy, not a life-force."[347] Naturally, therefore, the principle should permeate the educational scheme also. As has been pointed out, it lies at the bottom of the training that the scheme gives for an economy in which the main feature is the decentralisation of industry and agriculture.

(iv) *Naturalism*: Philosophically the Wardha system takes no account of God, religion or the supernatural, even when it claims that it is not godless as the Russian system[348] is. It places God and religion outside the sphere of education, making it completely secular. Religion is the private affair of the individual who must look after it as he thinks best. In a secular State, it is said, the scheme of education cannot be anything but secular. One may find it possible to agree with this position though with a reservation; for as Aldous Huxley points out:

> Religion is, among many other things, a system of education, by means of which human beings may train themselves, first, to make desirable changes in their own personalities, and, at one remove, in society, and, in the second place, to heighten consciousness and so establish more adequate relations between themselves and the universe of which they are parts.[349]

However, naturalism is the guiding principle of the System—a naturalism "which takes Nature as the whole of reality".[350] It excludes everything that is supernatural for—"naturalism is the attitude of mind characteristic of all system of thought which deny the existence of an order transcending nature and sense-experience".[351]

In the realm of method the naturalism of the scheme lies in its use of the social and physical environments in the interests of the development of the child. These provide the starting points and the line of activity on the part of the child. Activity is the most natural mode of the education of the child. That has been capitalised. There is really nothing new in this for the Activity School had already been popularised by the writings of Adolph Ferrier whose book *The Activity School* seems to have had considerable influence on the framers of the Wardha Scheme.

10. *Conclusion*: The aim of this study has been to try to discover the manner in which the mind of India has in our times attempted to find out and give expression to truth, and to try to state the philosophies underlying the experiments at education related to the genius and the needs of the country. We have endeavoured to show what the four systems under study have done to impart to education the quality of nativeness or indegeneity in thought and practice, even while adapting, perhaps freely, from the West. The Gurukula and the Visva-Bharati are prominent examples of the Indian tradition of education, revived and

347. M. K. Gandhi: *Non-violence in Peace and War*, p. 128.
348. For an exposition of the Russian system, see Beatrice King: *Changing Man.*
349. Aldous Huxley: *Ends and Means*, p. 225.
350. W. E. Hocking: *Types of Philosophy*, p. 43.
351. Geoffrey O'Connell: *Naturalism in American Education*, p. 1.

adapted, and the other two systems while borrowing from the West some of their principles and practices, have still kept themselves nearer to the soil in which they had birth by giving due consideration to the elements of time and space. We have also seen that these systems have in them various philosophical trends with one of them predominating.

A plea for revitalising Indian tradition of education : The desire on the part of India to follow the West in its system of education and in other spheres as well is strong, for she feels that then only can she take her place among the nations of the earth. There is no doubt that in a good many respects her past, however glorious, will never be revived in its pristine glory. Perhaps it is best that it should not. But it is important that not for museum purposes but for utility purposes there must be some institutions in the country that would exemplify the spirit and mind of India in the sphere of education. It is common for us to consider what is native as uninspired and what is exotic as honourable and worthwhile. But the Indian genius has proved its excellence and has expressed itself in such forms and manner as to be eternally valuable. It would be to the constant inspiration of the country if the tradition of Indian education were embodied in at least a few of its institutions. To be realistic, we may assume that in spite of all attempts at indigenisation that will be made now that independence is gained, in the matter of education there will be a large measure of the organisation and practice borrowed from the West, and the shape of education to come (one may say, to remain), will be much like what we now have. We shall have no quarrel with it if it will serve the country in its present or future needs. But what we do feel is that India should not allow her own tradition and philosophy to die out, for in the last resort, it is out of that strength that her sweetness will come, and out of that treasure, her light.

The example of England : From the scientific and utilitarian points of view, there is no doubt that the newer universities of England are rendering a service to the land that the older universities of Oxford and Cambridge cannot. Even statesmen and politicians that preside over the destinies of the country need not be drawn from the two ancient universities. Nor are the famous public schools of England an essential asset to the country in the practical realm. Nevertheless, the Englishman cherishes the educational tradition embodied in the great public schools and the medieval universities as it is there that the individuality of the nation is preserved and the spirit of English character and culture promoted and passed on to posterity. The public school system has been criticised on several scores, and yet it has a value as representing the English tradition of education built up through centuries and nourished on English ideals. Dr. Cyril Norwood writing in appreciation of the system points out that it is the Englishmen's great national tradition of education and should not be neglected since it pre-eminently embodies great national ideals and renders valuable national service :

For what has happened in the course of the last hundred years is that the old ideals have been recaptured. The ideal of chivalry which inspired the knighthood

of medieval days, the ideal of training for the service of the community, which inspired the greatness of the men who founded schools for their own day and for posterity, have been combined in the tradition of English education which holds the field today. It is based upon religion: it relies largely upon games and open-air prowess, where these involve corporate effort: it has developed an intellectual appeal on many sides which is meant to promote the growth of many diverse gifts: it has cast its Puritanism, and has no longer any fear of art, or music, or even the drama. It is inspired by the duty of preparing all for the service of their generation. It is by no means now the private monopoly of a few privileged schools, but it ought to spread fast to all the schools of the country.[352]

This is only one of the many statements of appreciation of the indigenous system of education in England and an enthusiastic researcher will find a number of such appreciations scattered through literary and educational writings.[353] The question for us is whether there are any particular institutions or traditions to which we can point as embodying our own philosophy of education. There is a place for a nation-wide scheme of education which may mainly be utilitarian preparing children for a vocation as also for Redbrick Universities that give training in textiles and similar large-scale trades. But they will not embody what is the best and highest in Indian culture and spirit. To preserve our own cultural and educational heritage we must have at least some schools and universities in the country to which people will turn when they want to find the soul or the genius of India, as people turn to the public schools and Oxford and Cambridge when they want to find the soul or the genius of England.

The renaissance of India's freedom: The most pertinent question here is what is to be the nature and form of such schools and universities? In the opinion of the writer these institutions will partake of the spirit and organisation resulting from a judicious blend of the Gurukula and the Visva-Bharati Systems. A system like the Jamia Millia will make its specific contribution through its own cultural and spiritual heritage, and a system like the Wardha through its theory of "villagism" looking to a resuscitation of the countryside by means of a craft-centred education. Philosophically speaking, the institutions must retain in a full measure India's two greatly cherished ideals: God-consciousness and world-consciousness. In other words, they must undergird themselves by a harmonised blend of Supernaturalism and Humanism which should be their predominant twin philosophies. So will they be able to keep alive for the spiritual and cultural benefit of India her best educational thought. That this is one of the greatest needs of free India is recognised by all serious-minded persons. C. Rajagopalachari, exhorting the students of the Visva-Bharati at its annual convocation last year, said:

We are in difficult times. It is difficult for us to look to ancient things, to speak in their language in the present context of the world. We are trying to read Sanskrit but we cannot speak in the language of the Rishis. I hope that people would possess

---

352. Cyril Norwood: *The English Tradition of Education*, pp. 19-20.
353. One such appreciation is in the chapter, "Oxford, Cambridge, and the Public Schools", in C. E. M. Joad: *About Education*.

in their lives the pattern of behaviour which would keep alive the wisdom of the Rishis of ancient times in the modern context.[354]

If the hope of this great leader is to be realised, the country should make it one of its supreme concerns to establish the national institutions suggested here that will interpret " the great doctrine of India's spiritual and cultural life " for the enrichment of the lives of her sons and daughters, and will serve " not to revive the glories of India, but to create the renaissance of India's freedom ".[355]

[*Dr. C. M. Thacore's original thesis contains a study of three additional aspects, viz. realistic trends, social and individual aims, and freedom and discipline as they are reflected in these four systems. These portions of the thesis, however, are not summarised here.*—MADHURI R. SHAH, Managing Editor.]

354. Reported in *The Pioneer*, Lucknow, December 27, 1947.
345. Mrs. Sarojini Naidu: *Convocation Address at the Visva-Bharati*, 1947, reported in *The Pioneer*, Lucknow, December 27, 1947.